US005571181A

United States Patent [19]

Li

[11] Patent Number: 5,571,181

[45] Date of Patent: *Nov. 5, 1996

[54] **SOFT TISSUE CLOSURE SYSTEMS**

[76] Inventor: **Shu-Tung Li**, 1 Kiowa Ter., Oakland, N.J. 07436

[*] Notice: The term of this patent shall not extend beyond the expiration date of Pat. No. 5,326,350.

[21] Appl. No.: **212,008**

[22] Filed: **Mar. 11, 1994**

Related U.S. Application Data

[63] Continuation-in-part of Ser. No. 881,213, May 11, 1992, Pat. No. 5,326,350.

[51] **Int. Cl.**[6] **A61F 2/02**; A61F 13/20

[52] **U.S. Cl.** **623/11**; 604/15; 604/57; 604/21; 604/208; 604/228; 604/311; 606/213; 128/DIG. 8

[58] **Field of Search** 623/11; 606/213, 606/214, 215, 229; 604/15, 57, 59, 60, 310, 311, 21, 208, 228; 128/DIG. 8

[56] **References Cited**

U.S. PATENT DOCUMENTS

939,693	11/1909	Holtzmann	604/60
3,157,524	11/1964	Artandi	106/122
3,364,200	1/1968	Ashton et al.	260/212
3,506,008	3/1968	Huck	604/60
3,520,402	7/1970	Nichols	206/59
3,742,955	7/1973	Battista et al.	128/334
4,016,877	4/1977	Cruz, Jr. et al.	128/156
4,066,083	1/1978	Ries	128/325
4,215,200	7/1980	Miyata et al.	435/273
4,271,070	6/1981	Miyata et al.	260/123
4,412,947	11/1983	Cioca	260/123
4,421,504	12/1983	Kline	604/15
4,515,637	5/1985	Cioca	424/94
4,578,067	3/1986	Cruz, Jr.	604/368
4,744,364	5/1988	Kensey	128/334 R
4,890,612	1/1990	Kensey	623/1
4,891,359	1/1990	Saferstein et al.	514/21
5,061,274	10/1991	Kensey	606/215
5,108,421	4/1992	Fowler	604/15
5,129,882	7/1992	Weldon et al.	606/213
5,156,613	10/1992	Sawyer	606/213
5,206,028	4/1993	Li	424/484
5,308,889	5/1994	Rhee et al.	523/113
5,320,639	6/1994	Rudnick	604/15
5,456,693	10/1995	Conston et al.	606/192

FOREIGN PATENT DOCUMENTS

9308746	5/1993	WIPO	606/213

OTHER PUBLICATIONS

"Immediate Sealing of Arterial Puncture Sites After Cardiac Catheterization and Coronary Angioplasty Using a Biodegradable Collagen Plug: Results of an International Registry", S. M. P. G. Ernest, et al., JACC, vol. 21, No. 4 Mar. 15, 1993:851–5.

Primary Examiner—John G. Weiss
Assistant Examiner—Bruce E. Snow
Attorney, Agent, or Firm—Fish & Richardson P.C.

[57] **ABSTRACT**

A soft tissue closure system for closing percutaneous puncture sites or soft tissue voids, its method of manufacture and method of use are disclosed. The system comprises a delivery means and a self-expandable, resorbable implant disposed within the delivery means in a compressed configuration. Upon release of the implant member from the system within a soft tissue void, the implant member self-expands to conform to the shape of the soft tissue void and seals the void.
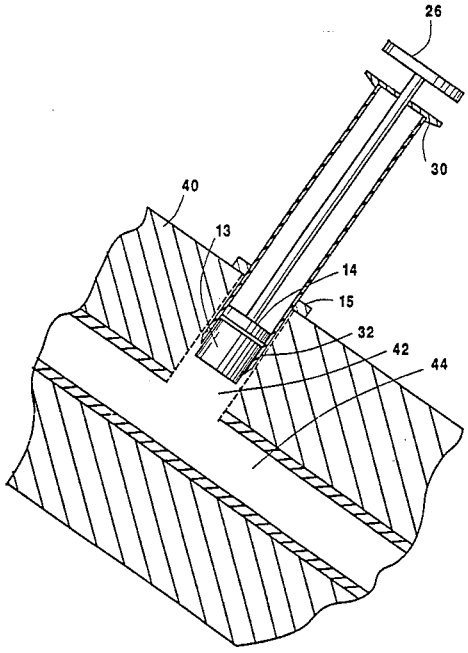
13 Claims, 4 Drawing Sheets