US006367281B1

(12) **United States Patent**
Hugenroth

(10) **Patent No.: US 6,367,281 B1**
(45) **Date of Patent: Apr. 9, 2002**

(54) **SOLID PHASE CHANGE REFRIGERATION**

(76) Inventor: **Jason James Hugenroth**, 707 Town Dr., Hope, AR (US) 71801

(*) Notice: Subject to any disclaimer, the term of this patent is extended or adjusted under 35 U.S.C. 154(b) by 0 days.

(21) Appl. No.: **09/866,206**

(22) Filed: **May 24, 2001**

Related U.S. Application Data

(60) Provisional application No. 60/206,956, filed on May 25, 2000.

(51) **Int. Cl.**[7] **F25B 23/00**
(52) **U.S. Cl.** **62/467**
(58) **Field of Search** 62/467

(56) **References Cited**

U.S. PATENT DOCUMENTS

2,931,189 A * 4/1960 Sigworth 415/141
3,036,444 A * 5/1962 Cochran 62/467
5,339,653 A * 8/1994 DeGregoria 165/10

* cited by examiner

Primary Examiner—William E. Tapolcai

(57) **ABSTRACT**

A refrigeration cycle is disclosed whereby: straining a material results in a solid phase change of the material. This phase change is accompanied by an adiabatic and nearly reversible temperature rise in the material. The material in its strained state rejects heat to its surroundings. When said material is relaxed from its strained state, a solid phase change occurs back to its initial phase. This phase change is accompanied by an adiabatic and nearly reversible temperature drop, in the material. In the relaxed state said material absorbs heat from a low temperature source.
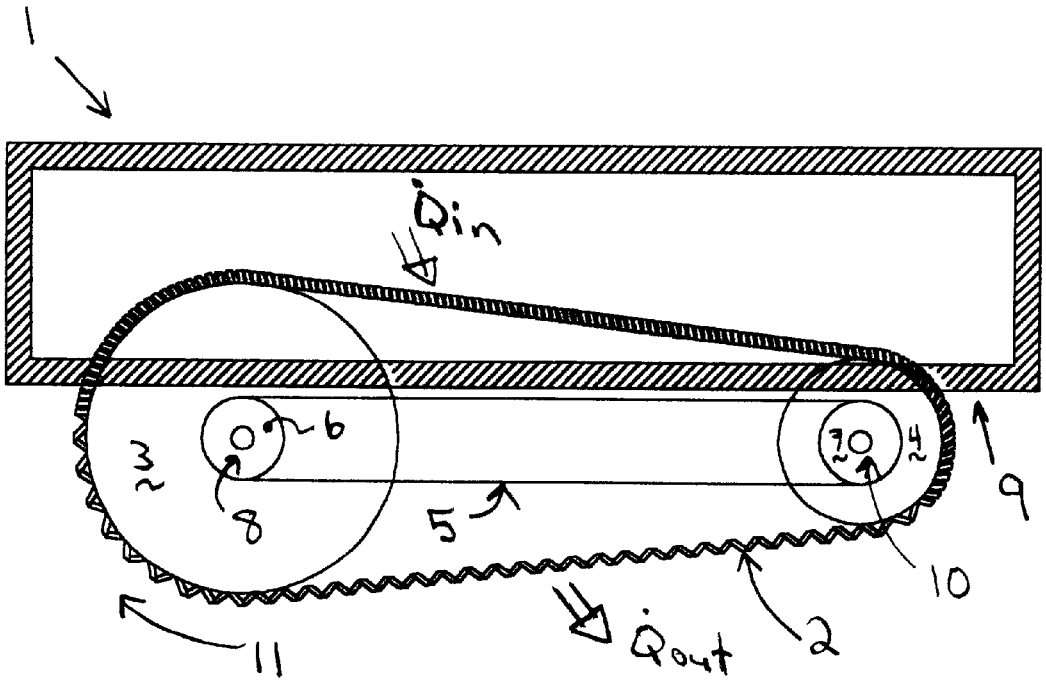
22 Claims, 2 Drawing Sheets