US005366481A

United States Patent [19]

Zade

[11] Patent Number: 5,366,481

[45] Date of Patent: Nov. 22, 1994

[54] SANITARY RETRACTABLE BABY PACIFIER

[76] Inventor: Ismail Y. Zade, 25 Larissa La., Thornwood, N.Y. 10594

[21] Appl. No.: 181,822

[22] Filed: Jan. 18, 1994

[51] Int. Cl.[5] A61J 17/00

[52] U.S. Cl. 606/236; 606/234

[58] Field of Search 606/234–236; 215/11.1–11.6; D24/194–199

[56] References Cited

U.S. PATENT DOCUMENTS

3,129,709	4/1964	Rountree	606/234
3,363,630	1/1968	Hines	606/234
4,329,996	5/1982	Copeland	606/234
4,867,159	9/1989	Fulton	606/236
4,878,496	11/1989	Chen	606/234
5,156,617	10/1992	Reid	606/234
5,211,656	5/1993	Maddocks et al.	606/234

Primary Examiner—Stephen C. Pellegrino
Assistant Examiner—Glenn K. Dawson
Attorney, Agent, or Firm—Martin J. Spellman, Jr.

[57] ABSTRACT

A retractable pacifier having a cylindrical housing with a shield member at one end and a wall with an aperture at the other end. Near the top and bottom of the inner wall of the housing are retainer slots for cooperating with spaced tabs or nibs on the periphery of a disk attached to the base of a nipple for locking the nipple in an extended position or a retracted position.
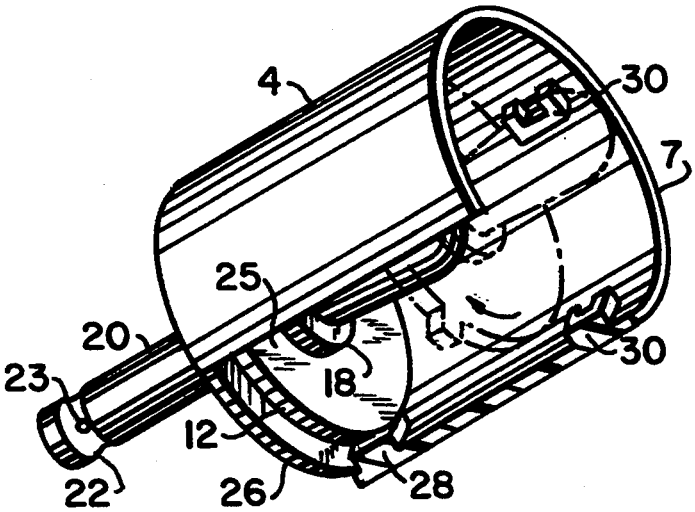
1 Claim, 3 Drawing Sheets