United States Patent [19]

Mares et al.

[11] **Patent Number: 5,061,281**

[45] **Date of Patent: Oct. 29, 1991**

[54] **BIORESORBABLE POLYMERS AND IMPLANTATION DEVICES THEREOF**

[75] Inventors: **Frank Mares**, Whippany; **Reginald T. Tang**, Warren, both of N.J.; **Tin-Ho Chiu**, Reading, Mass.; **Theodore Largman**, Morristown; **Emery Nyilas, deceased**, late of Austin, Tex., by Ilona Nyilas, executor

[73] Assignee: **Allied-Signal Inc.**, Morris Township, Morris County, N.J.

[21] Appl. No.: **942,907**

[22] Filed: **Dec. 17, 1986**

Related U.S. Application Data

[63] Continuation-in-part of Ser. No. 809,978, Dec. 17, 1985.

[51] **Int. Cl.**[5] **A61F 2/02**; A61F 2/04

[52] **U.S. Cl.** **623/11**; 623/12; 523/113; 523/114; 606/152

[58] **Field of Search** ..... 623/11, 66, 16, 12; 528/354, 272, 302, 303; 523/113, 114, 115; 128/334 R, 334 C, 335.5, DIG. 8

[56] **References Cited**

U.S. PATENT DOCUMENTS

2,668,162	2/1954	Lowe .	
2,703,316	3/1955	Schneider .	
3,463,158	8/1969	Schmitt et al.	623/66 X
3,531,561	9/1970	Trehu .	
3,636,956	1/1972	Schneider .	
3,792,010	2/1974	Wasserman et al. .	
3,797,499	3/1974	Schneider .	
3,867,190	2/1975	Schmitt et al. .	
3,883,901	5/1975	Coquard et al. .	
4,032,993	7/1977	Coquard et al. .	
4,137,921	2/1979	Okuzumi et al. .	
4,157,437	6/1979	Okuzumi et al. .	
4,243,775	1/1981	Rosensaft et al. .	
4,273,920	6/1981	Nevin .	
4,279,249	7/1981	Vert et al. .	
4,331,652	5/1982	Ludwig et al. .	
4,534,349	8/1985	Barrows	128/334 C X
4,643,734	2/1987	Lin	623/16

OTHER PUBLICATIONS

Nyilas et al., "Peripheral Nerve Repair with Bioresorbable Prosthesis", *Trans. Am. Soc. Artif. Intern. Organs*, vol. XXIX, Apr. 1983.

Primary Examiner—Alan W. Cannon

Attorney, Agent, or Firm—Richard C. Stewart; Gerhard H. Fuchs

[57] **ABSTRACT**

This invention relates to an implantable medical device capable of encouraging cellular growth and regeneration of function fabricated totally or in part from one or more bioresorbable polymers, as for example bioresorbable homopolymers derived from the polymerization of alpha-hydroxy carboxylic acids, where at least one of the polymers has an average molecular weight of from about 234,000 to about 320,000 as measured by gel permeation chromatography.
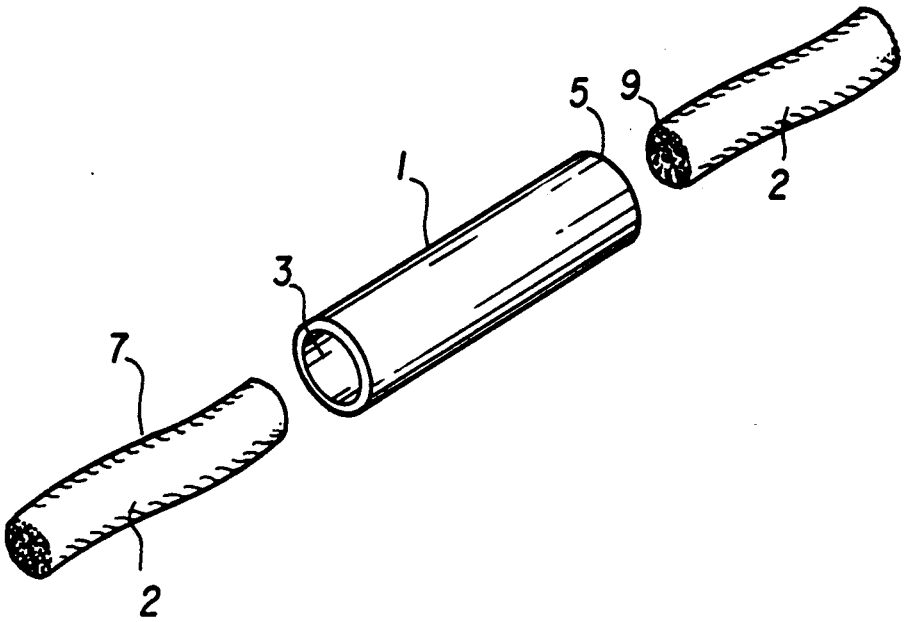
6 Claims, 1 Drawing Sheet