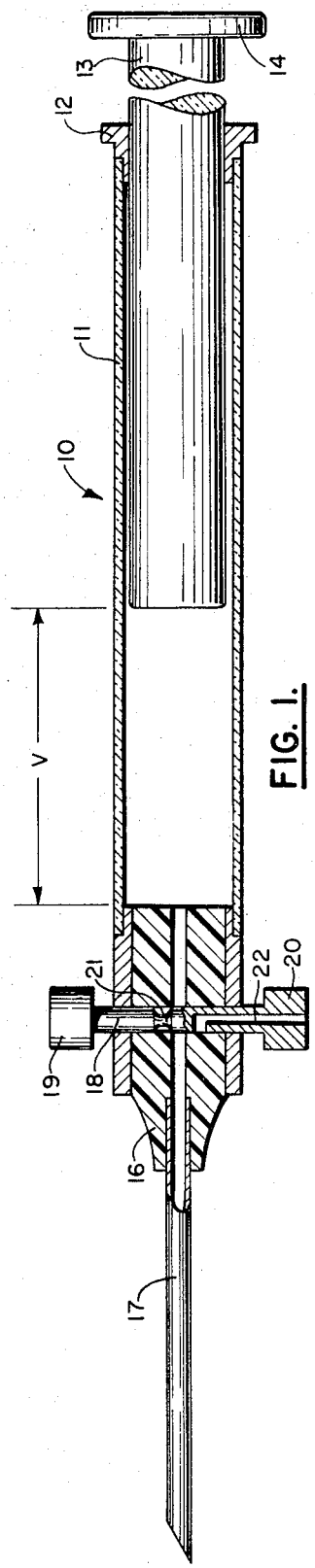

FIG. 1.

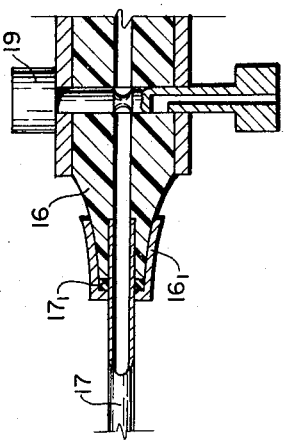

FIG. 2.

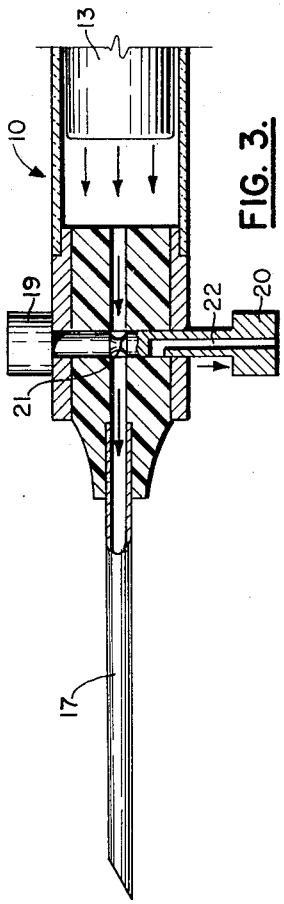

FIG. 3.

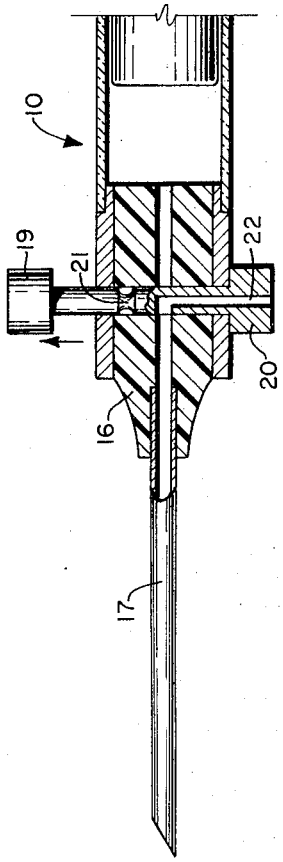

FIG. 4.

INVENTORS
RANO J. HARRIS, SR.
RANO J. HARRIS, JR.

BY

L. A. Proctor
ATTORNEY