350-333 SR
XR 4,041,481
TX 350 333

United States
Sato

4,041,481
Aug. 9, 1977

[54] **SCANNING APPARATUS FOR AN ELECTROPHORETIC MATRIX DISPLAY PANEL**

[75] Inventor: **Teruo Sato**, Kyoto, Japan

[73] Assignee: **Matsushita Electric Industrial Co., Ltd.**, Japan

[21] Appl. No.: **618,681**

[22] Filed: **Oct. 1, 1975**

[30] **Foreign Application Priority Data**

Oct. 5, 1974 Japan 49-114903
Oct. 5, 1974 Japan 49-114905

[51] **Int. Cl.**[2] **G06K 15/18**; G02F 1/13
[52] **U.S. Cl.** ..... **340/324 M**; 340/166 EL; 350/160 R
[58] **Field of Search** ..... 204/180 R, 181 PE, 299 PE, 204/300 PE; 340/324 M, 336; 350/160 R

[56] **References Cited**

U.S. PATENT DOCUMENTS

3,756,693	9/1973	Ota	350/160 R
3,823,998	7/1974	Yazaki et al.	350/160 R
3,835,463	9/1974	Tsukamoto et al.	340/324 M
3,891,306	6/1975	Mitomo et al.	340/324 M
3,892,568	7/1975	Ota	204/181 PE

Primary Examiner—David L. Trafton
Attorney, Agent, or Firm—Wenderoth, Lind & Ponack

[57] **ABSTRACT**

A scanning apparatus for an electrophoretic matrix display panel, has a horizontal (X-line) electrode driving circuit to provide a selecting pulse, a vertical (Y-line) electrode driving circuit to provide a data pulse, and an information signal supply means. An electric field is imposed across cells of an electrophoretic suspension layer to change the optical reflective property of the cells in a predetermined sequence after a pause interval by the horizontal and vertical electrode driving circuits. This causes operation of the display panel without cross effect.
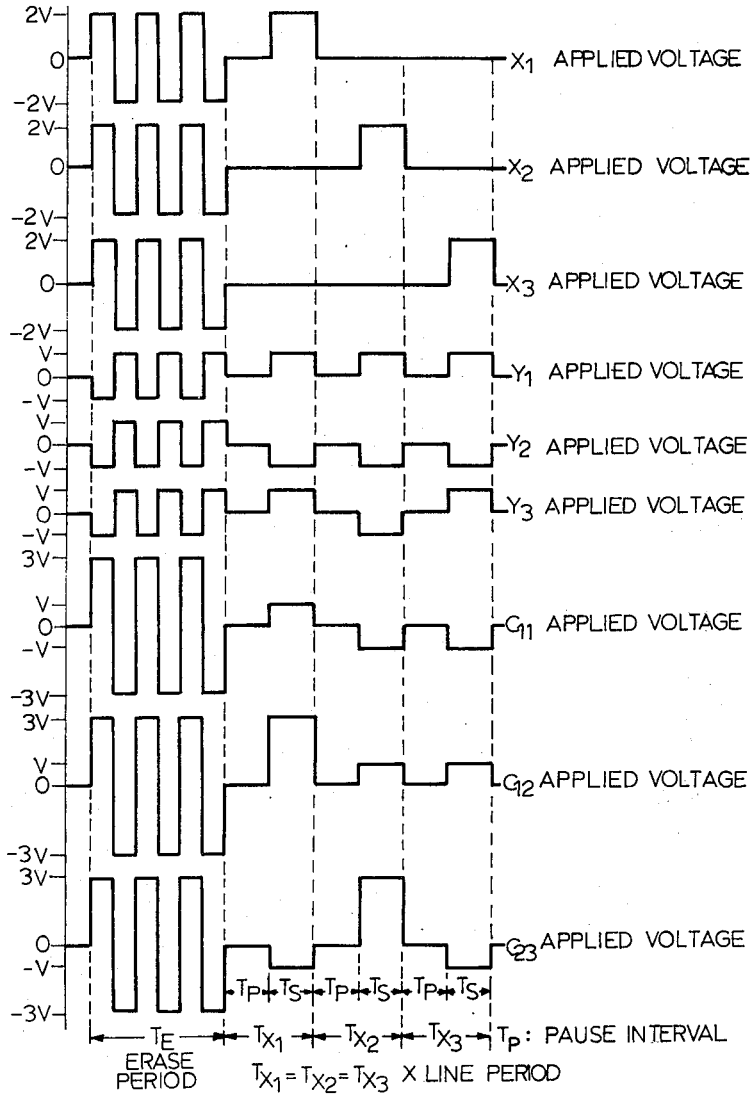
3 Claims, 22 Drawing Figures