US009638481B1

(12) **United States Patent**
Marano et al.

(10) **Patent No.: US 9,638,481 B1**
(45) **Date of Patent: May 2, 2017**

(54) **METHOD AND KIT FOR ELIMINATING SEMI-AUTOMATIC FEATURES FROM A WEAPON**

(71) Applicants: **Frank Marano**, Mountainside, NJ (US); **David Tyms**, Clinton, NJ (US)

(72) Inventors: **Frank Marano**, Mountainside, NJ (US); **David Tyms**, Clinton, NJ (US)

(*) Notice: Subject to any disclaimer, the term of this patent is extended or adjusted under 35 U.S.C. 154(b) by 177 days.

(21) Appl. No.: **14/042,804**

(22) Filed: **Oct. 1, 2013**

(51) **Int. Cl.**
F41A 3/02 (2006.01)
F41A 3/72 (2006.01)

(52) **U.S. Cl.**
CPC . ***F41A 3/02*** (2013.01); ***F41A 3/72*** (2013.01)

(58) **Field of Classification Search**
CPC F41A 3/66; F41A 3/72; F41A 7/02; F41A 11/00–11/02; F41C 7/02; F41C 23/16
USPC 89/128, 1.4
See application file for complete search history.

(56) **References Cited**

U.S. PATENT DOCUMENTS

2,752,826 A * 7/1956 Simpson F41A 5/18 89/1.4
4,056,038 A 11/1977 Rath
5,272,956 A * 12/1993 Hudson F41A 5/28 42/72
7,373,868 B2 5/2008 Quis
7,451,682 B2 11/2008 Quis
8,056,460 B2 11/2011 Herring
8,181,563 B1 * 5/2012 Peterken F41A 11/02 89/191.01
9,188,401 B2 * 11/2015 Pizano F41A 5/26
9,279,628 B1 * 3/2016 Pollack F41A 3/12
9,341,420 B2 * 5/2016 Foster F41A 3/72
9,347,737 B2 * 5/2016 Troy F41C 7/02
2003/0066226 A1 4/2003 Martin
2010/0000396 A1 1/2010 Brown
2010/0000400 A1 * 1/2010 Brown F41A 5/18 89/191.01
2010/0199836 A1 8/2010 Herring
2011/0061523 A1 3/2011 Webb
2011/0271827 A1 * 11/2011 Larson F41A 5/28 89/193

* cited by examiner

Primary Examiner — Stephen M Johnson
Assistant Examiner — Benjamin Gomberg
(74) *Attorney, Agent, or Firm* — Brian J. Colandreo; Michael T. Abramson; Holland & Knight LLP

(57) **ABSTRACT**

Semi-automatic features can be eliminated from a weapon that originally had a bolt carrier that was reciprocated by a gas tube communicating with a barrel. After eliminating the gas tube, a carriage and pushing member can be taken from a kit and installed on the weapon. The carriage is reciprocatably mounted at the barrel forward of the bolt carrier, with the pushing member connecting between the carriage and the bolt carrier. The carriage can be manually reciprocated to reciprocate the push member and the bolt carrier.
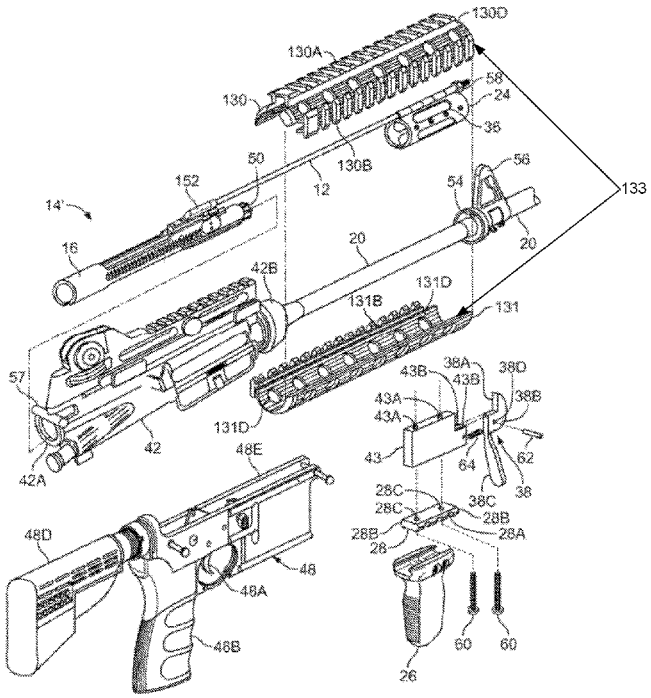
20 Claims, 10 Drawing Sheets