United States Patent [19]

Brefka et al.

[11] **Patent Number: 4,636,881**

[45] **Date of Patent: Jan. 13, 1987**

[54] **TALKING BOOK WITH AN INFRARED DETECTOR USED TO DETECT PAGE TURNING**

[75] Inventors: **Paul E. Brefka**, Southboro; **Klaus R. Pichler**, Princeton, both of Mass.

[73] Assignee: **James T. Shaw**, Sagaponack, N.Y.

[21] Appl. No.: **648,731**

[22] Filed: **Sep. 10, 1984**

[51] **Int. Cl.**[4] **G11B 15/48**; G11B 5/06

[52] **U.S. Cl.** **360/74.1**; 434/317; 369/31; 369/64; 360/12

[58] **Field of Search** 360/1, 12, 74.1, 74.6, 360/137, 69; 369/31, 32, 63–65, 68, 69, 273; 434/317, 308, 309; 250/221, 561, 571

[56] **References Cited**

U.S. PATENT DOCUMENTS

3,086,297	4/1963	Kay	434/317
3,220,126	11/1965	Gabrielson	434/317 X
3,396,279	8/1968	Tokuda	250/221
3,540,132	11/1970	Glass et al.	369/69 X
3,641,684	2/1972	Paige	360/1 X
3,662,078	5/1972	Holiday	434/317 X
3,738,021	6/1973	Hino et al.	434/317
3,808,720	5/1974	Smith	434/317 X

Primary Examiner—Raymond F. Cardillo
Assistant Examiner—Steven R. Garland
Attorney, Agent, or Firm—Charles Hieken

[57] **ABSTRACT**

A talking book includes front and back panels. A microcassette tape player and logical circuitry with left and right infrared detectors are located at the top of the back panel. A ring binder is located at the left of the back panel adjacent the spline and below the left and right infrared detectors. A housing below the ring binder carries an infrared source that energizes the left and right infrared detectors. The housing also carries a headset jack. A conduit located beside the ring binder accommodates wires between the logical circuitry and the housing.
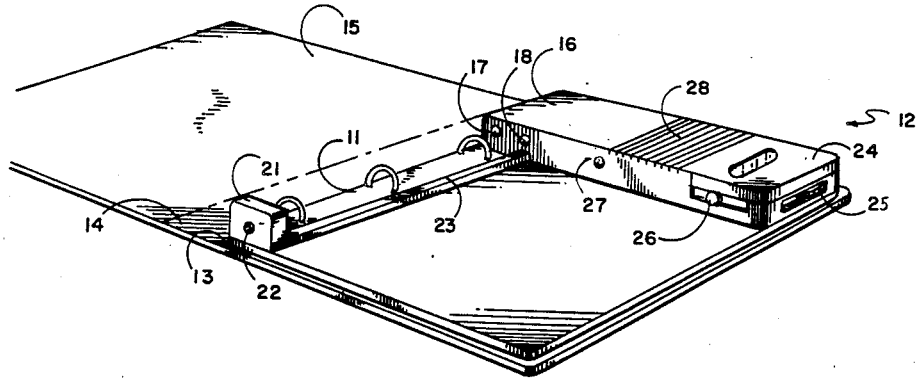
9 Claims, 13 Drawing Figures