US007932781B2

(12) **United States Patent**
Lopez

(10) **Patent No.: US 7,932,781 B2**
(45) **Date of Patent: Apr. 26, 2011**

(54) **MULTI-PLANAR SOLID STATE AMPLIFIER**

(75) Inventor: **Noel A. Lopez**, Phoenix, AZ (US)

(73) Assignee: **ViaSat, Inc.**, Carlsbad, CA (US)

(*) Notice: Subject to any disclaimer, the term of this patent is extended or adjusted under 35 U.S.C. 154(b) by 0 days.

(21) Appl. No.: **12/437,414**

(22) Filed: **May 7, 2009**

(65) **Prior Publication Data**

US 2009/0212871 A1 Aug. 27, 2009

Related U.S. Application Data

(63) Continuation of application No. 11/853,897, filed on Sep. 12, 2007, now Pat. No. 7,532,073.

(51) **Int. Cl.**
H03F 3/68 (2006.01)

(52) **U.S. Cl.** ..... **330/295**; 330/53; 330/124 R

(58) **Field of Classification Search** ..... 330/295, 330/53, 124 R
See application file for complete search history.

(56) **References Cited**

U.S. PATENT DOCUMENTS

4,291,278	A *	9/1981	Quine	330/286
4,677,393	A *	6/1987	Sharma	330/286
5,032,798	A *	7/1991	Myer	330/295
5,159,290	A *	10/1992	Bartley et al.	330/295
5,754,402	A *	5/1998	Matsuzaki et al.	361/707
6,242,984	B1 *	6/2001	Stones et al.	330/295
6,525,610	B1 *	2/2003	Nakata	330/286

* cited by examiner

Primary Examiner — Patricia Nguyen
(74) *Attorney, Agent, or Firm* — Snell & Wilmer LLP

(57) **ABSTRACT**

A solid state power amplifier (SSPA) system may include a radio frequency (RF) input, an RF waveguide split block, multiple monolithic microwave integrated circuit (MMIC) power amplifier modules, and/or a heat spreader. The power amplifier modules and RF waveguide may be distributed about the heat spreader in different planes. Furthermore, the power amplifier modules may be located on opposite sides of the heat spreader and nonplanar to the waveguide split block. A method for dissipating heat within an SSPA may include receiving an RF signal in a first plane, amplifying the RF signal in another plane, and combining the RF signal in yet another plane.
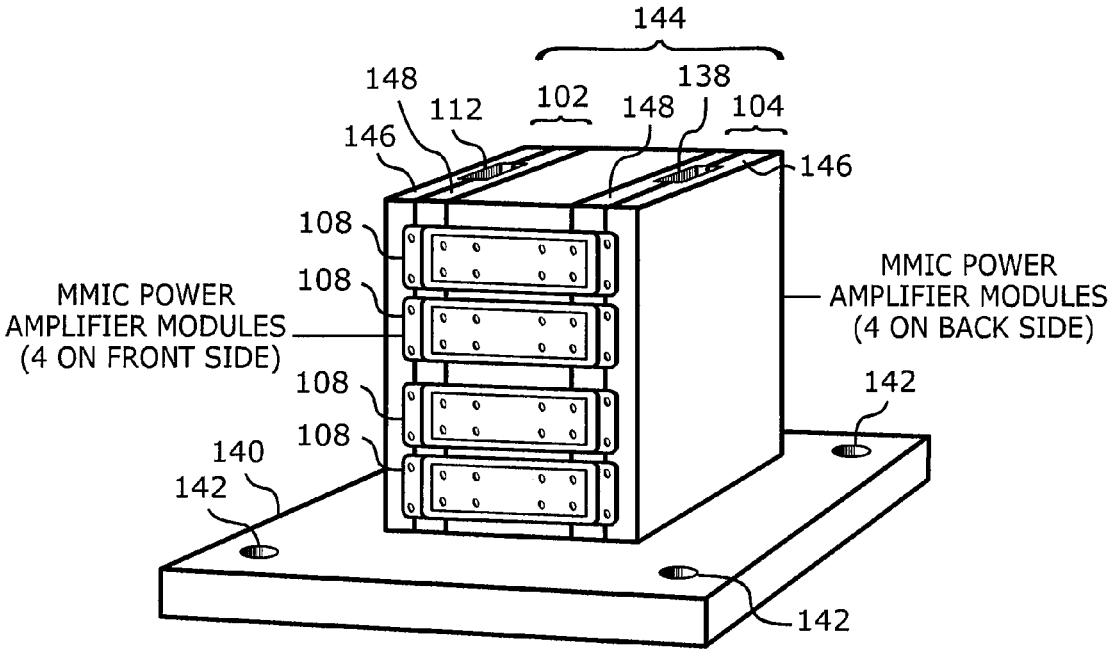
19 Claims, 11 Drawing Sheets