Jan. 31, 1956 E. R. HECK 2,732,581

HINGE STRUCTURE FOR MOLDED PLASTIC BOXES

Filed Dec. 13, 1954

Fig. 7.

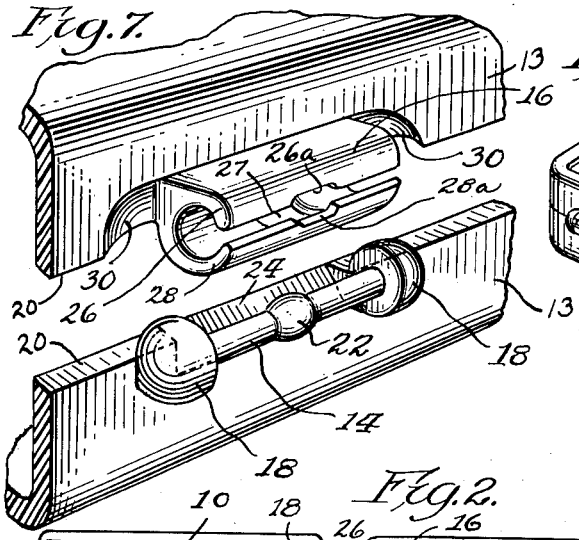

Fig. 1

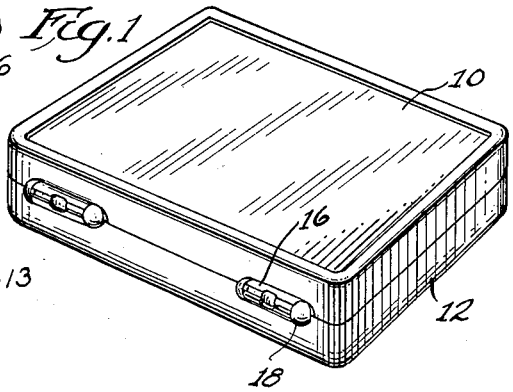

Fig. 2.

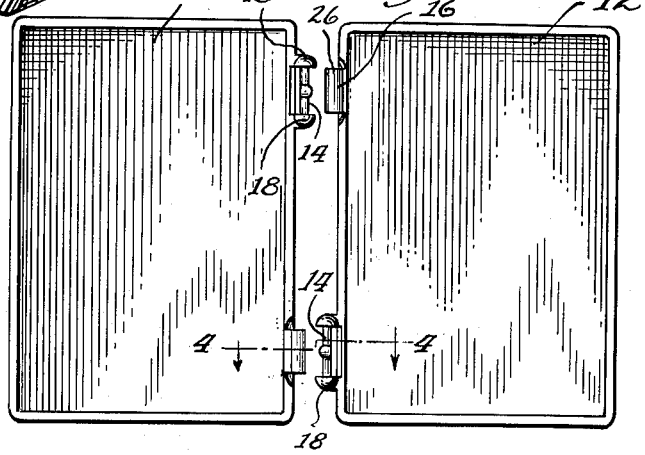

Fig. 5.

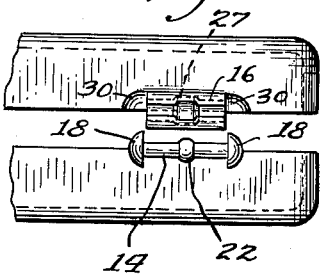

Fig. 6.

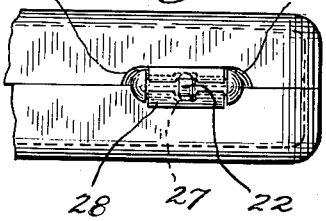

Fig. 3.

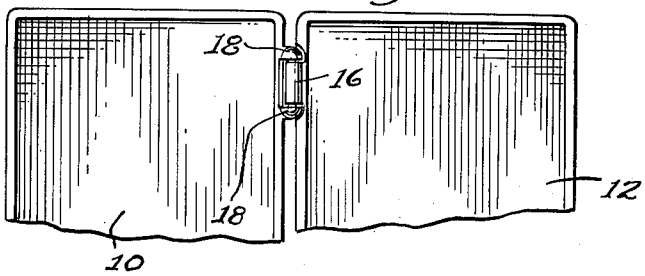

Fig. 4.

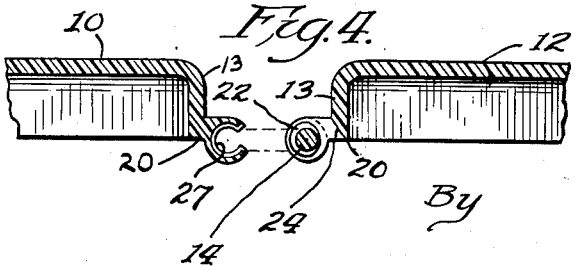

Inventor
ERVIN R. HECK
By Max R. Kraus
Atty.