United States Patent

[11] **3,622,081**

[72] Inventor **William C. Marsh**
Marysville, Ohio

[21] Appl. No. **835,173**
[22] Filed **June 20, 1969**
[45] Patented **Nov. 23, 1971**
[73] Assignee **Sciete d'Assistance Technique Pour Produits Nestle S. A.**

[54] **NOZZLE**
3 Claims, 2 Drawing Figs.

[52] **U.S. Cl.** **239/427.3,** 239/427.5
[51] **Int. Cl.** **B05b 17/06**
[50] **Field of Search** 239/427.3, 427, 427.5

[56] **References Cited**

UNITED STATES PATENTS

783,898	2/1905	Scherding	239/427.5
3,073,534	1/1963	Hampshire	239/427.5 X
1,082,815	12/1913	Melas	239/427.3
1,545,252	7/1925	Grote	239/427.3
2,047,570	7/1936	Wiltshire	239/427.3
3,423,028	1/1969	Stupakis	239/427.3

FOREIGN PATENTS

617,209	8/1935	Germany	239/427.3

Primary Examiner—Lloyd L. King
Attorney—Watson, Leavenworth & Kelton
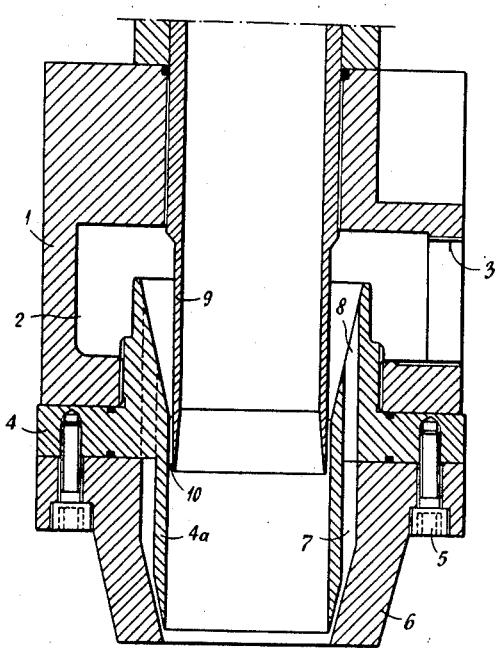
ABSTRACT: A nozzle for agglomerating powdered materials, especially food products, comprises at least two annular steam inlets into a central duct through which the material is passed. Other features of the invention appear in the specification and drawings.