Jan. 2, 1962 F. G. UMHOLTZ 3,015,281

PORTABLE LIQUID PUMP

Filed Feb. 23, 1960

FIG. 1.

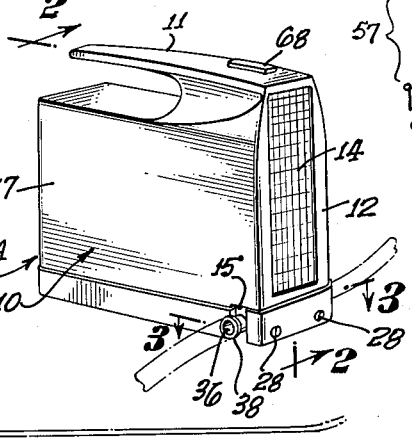

FIG. 4.

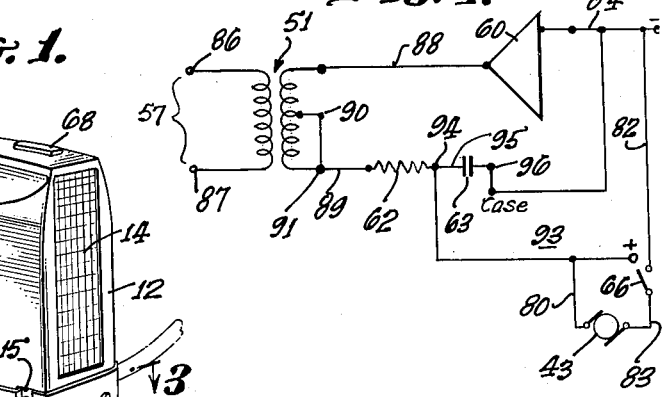

FIG. 2.

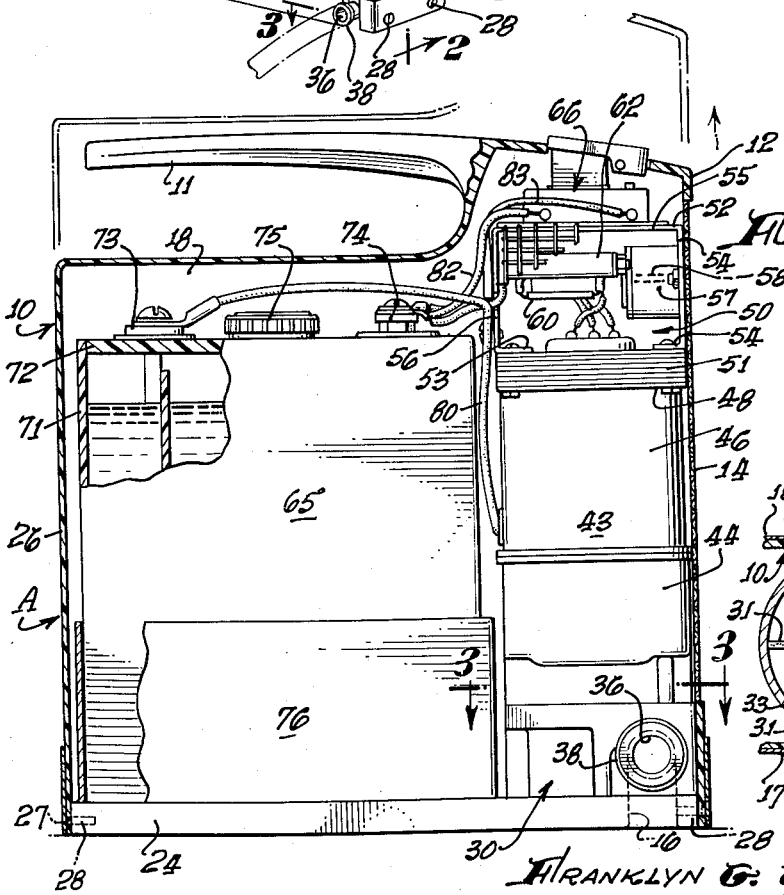

FIG. 3.

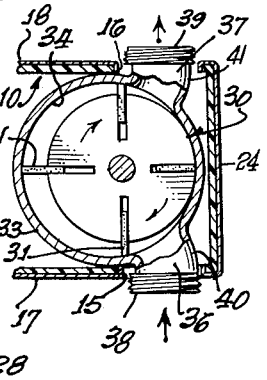

FRANKLYN G. UMHOLTZ,
INVENTOR.

BY

William A. Spenley