US009411281B2

(12) **United States Patent**
Kondoh et al.

(10) **Patent No.: US 9,411,281 B2**
(45) **Date of Patent: Aug. 9, 2016**

(54) **FIXING MEMBER, FIXING DEVICE, AND IMAGE FORMING APPARATUS**

(71) Applicants: **Tsuneaki Kondoh**, Kanagawa (JP); **Junichiro Natori**, Kanagawa (JP); **Tomoaki Sugawara**, Kanagawa (JP)

(72) Inventors: **Tsuneaki Kondoh**, Kanagawa (JP); **Junichiro Natori**, Kanagawa (JP); **Tomoaki Sugawara**, Kanagawa (JP)

(73) Assignee: **RICOH COMPANY, LTD.**, Tokyo (JP)

(*) Notice: Subject to any disclaimer, the term of this patent is extended or adjusted under 35 U.S.C. 154(b) by 0 days.

(21) Appl. No.: **14/429,896**

(22) PCT Filed: **Oct. 11, 2013**

(86) PCT No.: **PCT/JP2013/078398**
§ 371 (c)(1),
(2) Date: **Mar. 20, 2015**

(87) PCT Pub. No.: **WO2014/065219**
PCT Pub. Date: **May 1, 2014**

(65) **Prior Publication Data**

US 2015/0248083 A1 Sep. 3, 2015

(30) **Foreign Application Priority Data**

Oct. 26, 2012 (JP) 2012-236551
Aug. 2, 2013 (JP) 2013-161002

(51) **Int. Cl.**
G03G 15/20 (2006.01)

(52) **U.S. Cl.**
CPC ***G03G 15/206*** (2013.01); ***G03G 15/2057*** (2013.01)

(58) **Field of Classification Search**
USPC 399/107, 110, 122, 320, 328–333; 492/49, 53, 56, 57, 59; 428/36.8, 334
See application file for complete search history.

(56) **References Cited**

U.S. PATENT DOCUMENTS

5,547,759 A * 8/1996 Chen B32B 25/14 219/244
6,680,095 B2 * 1/2004 Gervasi B32B 15/08 428/334
6,696,158 B1 * 2/2004 Chen C08K 5/544 399/333
7,558,520 B2 7/2009 Sugawara et al.
7,813,689 B2 10/2010 Nakamura et al.
8,301,068 B2 10/2012 Kondoh et al.
8,452,221 B2 5/2013 Kaneko et al.

(Continued)

FOREIGN PATENT DOCUMENTS

JP 09-204113 8/1997
JP 2000-019879 1/2000

(Continued)

OTHER PUBLICATIONS

International Search Report Issued Nov. 19, 2013 for counterpart International Patent Application No. PCT/JP2013/078398 dated Oct. 11, 2013.

(Continued)

Primary Examiner — Hoan Tran
(74) *Attorney, Agent, or Firm* — Cooper & Dunham LLP

(57) **ABSTRACT**

A fixing member, including a releasing layer, wherein the releasing layer contains a fluoropolymer and a polysiloxane having a cross-linked structure, and wherein the fixing member is used in a process for heating a toner image on a recording medium to thereby fix the toner image onto the recording medium.
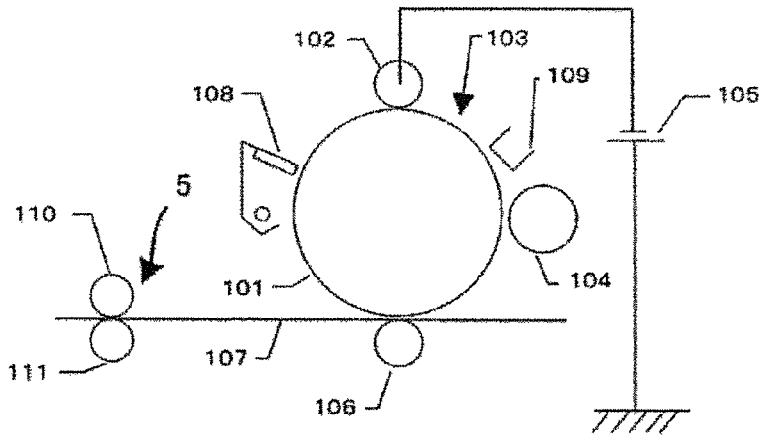
10 Claims, 2 Drawing Sheets