US009410781B1

(12) **United States Patent**
Hooke et al.

(10) **Patent No.: US 9,410,781 B1**
(45) **Date of Patent: Aug. 9, 2016**

(54) **FIN-STABILIZED, MUZZLE-LOADED MORTAR PROJECTILE WITH SABOT**

(71) Applicants: **Ryan Hooke**, Bangor, PA (US); **Jackie Longcore**, Augusta, NJ (US); **Kyle Schaarschmidt**, Bangor, PA (US); **Joshua Gallagher**, Hackettstown, NJ (US)

(72) Inventors: **Ryan Hooke**, Bangor, PA (US); **Jackie Longcore**, Augusta, NJ (US); **Kyle Schaarschmidt**, Bangor, PA (US); **Joshua Gallagher**, Hackettstown, NJ (US)

(73) Assignee: **The United States of America as Represented by the Secretary of the Army**, Washington, DC (US)

(*) Notice: Subject to any disclaimer, the term of this patent is extended or adjusted under 35 U.S.C. 154(b) by 37 days.

(21) Appl. No.: **14/444,415**

(22) Filed: **Jul. 28, 2014**

(51) **Int. Cl.**
F42B 14/06 (2006.01)
F42B 10/06 (2006.01)

(52) **U.S. Cl.**
CPC ***F42B 14/067*** (2013.01); ***F42B 10/06*** (2013.01); ***F42B 14/061*** (2013.01); *F42B 14/06* (2013.01)

(58) **Field of Classification Search**
CPC F42B 14/067; F42B 14/061; F42B 10/06; F42B 14/06; F42B 14/062; F42B 14/064
USPC 102/520–523
See application file for complete search history.

(56) **References Cited**

U.S. PATENT DOCUMENTS

3,687,079	A *	8/1972	Scollins	F42B 14/02	102/373
4,142,467	A *	3/1979	Stahlmann	F42B 14/08	102/523
4,244,293	A *	1/1981	Grosswendt	F41A 1/10	102/374
4,314,510	A *	2/1982	Jeter	F42B 14/064	102/521
4,936,220	A *	6/1990	Burns	F42B 14/061	102/374
4,949,639	A *	8/1990	Burns	F42C 15/36	102/249
8,250,988	B2 *	8/2012	Heitmann	F42B 14/064	102/520
8,434,394	B1 *	5/2013	Malejko	F42B 10/14	102/374
8,561,544	B2 *	10/2013	Baumann	F42B 14/064	102/523
2010/0000439	A1 *	1/2010	Baumann	F42B 14/064	102/521

* cited by examiner

Primary Examiner — Samir Abdosh
Assistant Examiner — John D Cooper
(74) *Attorney, Agent, or Firm* — Michael C. Sachs

(57) **ABSTRACT**

A muzzle-loaded, fin-stabilized mortar round includes a projectile with a discarding sabot mounted thereon. The sabot includes one or more discrete sections that are circumferentially divided into a plurality of discrete sabot increments. In the case of more than one discrete section, the plurality of discrete sections are arranged longitudinally one after another in abutting relationship. Each sabot increment includes a base portion mechanically connected to the projectile and two opposing side portions mechanically connected to circumferentially adjacent sabot increments.
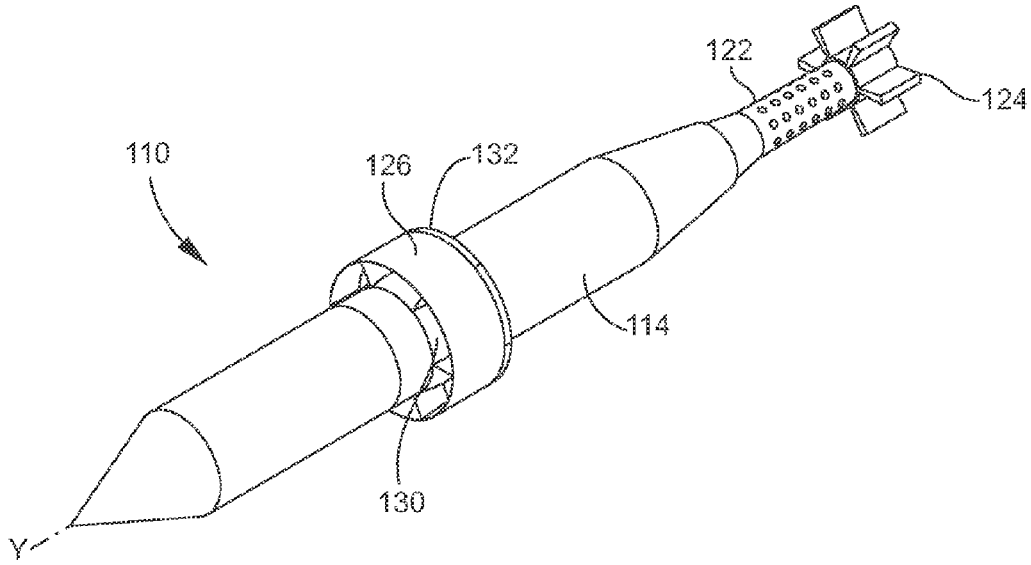
5 Claims, 12 Drawing Sheets