US009410681B2

(12) **United States Patent**
**Yao**

(10) **Patent No.: US 9,410,681 B2**
(45) **Date of Patent: Aug. 9, 2016**

(54) **DOUBLE-HEAD LAMP HOLDER AND LAMP PROVIDED WITH SAME**

(71) Applicant: **RUIAN HENGXIONG ELECTRIC CO., LTD.**, Ruian, Zhejiang (CN)

(72) Inventor: **Xiong Yao**, Zhejiang (CN)

(73) Assignee: **Ruian Hengxiong Electric Co., Ltd.**, Zhejiang (CN)

( * ) Notice: Subject to any disclaimer, the term of this patent is extended or adjusted under 35 U.S.C. 154(b) by 0 days.

(21) Appl. No.: **14/889,426**

(22) PCT Filed: **Jun. 25, 2014**

(86) PCT No.: **PCT/CN2014/080739**

§ 371 (c)(1),
(2) Date: **Nov. 5, 2015**

(87) PCT Pub. No.: **WO2015/180223**

PCT Pub. Date: **Dec. 3, 2015**

(65) **Prior Publication Data**

US 2016/0146437 A1 May 26, 2016

(30) **Foreign Application Priority Data**

May 29, 2014 (CN) ..... 2014 1 0233244

(51) **Int. Cl.**

| | |
|---|---|
| ***H01R 13/02*** | (2006.01) |
| ***F21V 21/00*** | (2006.01) |
| ***F21V 23/06*** | (2006.01) |

(52) **U.S. Cl.**

CPC ..... ***F21V 21/00*** (2013.01); ***F21V 23/06*** (2013.01)

(58) **Field of Classification Search**

USPC ..... 439/239, 226, 233, 241; 200/329, 336

See application file for complete search history.

(56) **References Cited**

U.S. PATENT DOCUMENTS

| | | | | |
|---|---|---|---|---|
| 5,113,044 | A * | 5/1992 | Tomberlin | H01R 33/9555 200/51.04 |
| 5,813,155 | A * | 9/1998 | Shen | A47G 1/0622 248/126 |
| 6,768,072 | B1 * | 7/2004 | Yang | H01H 13/58 200/320 |
| 7,491,077 | B1 * | 2/2009 | Yang | F21V 19/006 439/241 |
| 7,521,641 | B2 * | 4/2009 | Huang | H01R 33/9555 200/336 |
| 8,101,878 | B2 * | 1/2012 | Yang | H01H 3/42 200/51.17 |
| 8,491,324 | B1 * | 7/2013 | Yang | H01R 33/0836 439/226 |
| 8,657,614 | B2 * | 2/2014 | Sun | H01R 33/0854 439/233 |
| 8,657,615 | B2 * | 2/2014 | Sun | F21V 19/0085 439/239 |

FOREIGN PATENT DOCUMENTS

| | | | |
|---|---|---|---|
| CN | 2580642 | Y | 10/2003 |
| CN | 1975980 | A | 6/2007 |
| CN | 200950413 | Y | 9/2007 |
| CN | 200976321 | Y | 11/2007 |
| CN | 101527416 | A | 9/2009 |
| CN | 201805127 | U | 4/2011 |
| CN | 203615289 | U | 5/2014 |
| CN | 203871619 | U | 10/2014 |

* cited by examiner

*Primary Examiner* — Alexander Gilman
(74) *Attorney, Agent, or Firm* — Christensen Fonder P.A.

(57) **ABSTRACT**

A double-head lamp holder and a lamp provided with same. The lamp comprises a junction box and the double-head lamp holder. The lamp holder comprises a housing, a mounting seat is arranged in the housing, a first contact sheet and a second contact sheet that is attached to a binding post of a lamp source to be mounted are arranged on the mounting seat, a turnover flip cover is arranged on the housing, a third contact sheet is arranged on the flip cover, and the cover has an opened first position, and a second position which allows the third contact sheet to communicate the first contact sheet with the second contact sheet when the flip cover is closed.
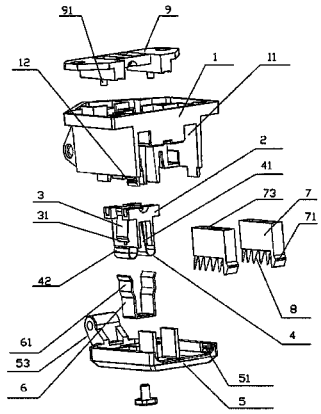
**11 Claims, 5 Drawing Sheets**