US005909081A

United States Patent [19]

Eida et al.

[11] **Patent Number: 5,909,081**

[45] **Date of Patent: Jun. 1, 1999**

[54] **MULTI-COLOR LIGHT EMISSION APPARATUS WITH ORGANIC ELECTROLUMINESCENT DEVICE**

[75] Inventors: **Mitsuru Eida**; **Masahide Matsuura**; **Hiroshi Tokailin**, all of Sodegaura, Japan

[73] Assignee: **Idemitsu Kosan Co., Ltd.**, Tokyo, Japan

[21] Appl. No.: **08/875,756**

[22] PCT Filed: **Feb. 5, 1996**

[86] PCT No.: **PCT/JP96/00233**

§ 371 Date: **Aug. 6, 1997**

§ 102(e) Date: **Aug. 6, 1997**

[87] PCT Pub. No.: **WO96/25020**

PCT Pub. Date: **Aug. 15, 1996**

[30] **Foreign Application Priority Data**

Feb. 6, 1995	[JP]	Japan	7-041267
Feb. 14, 1995	[JP]	Japan	7-049089
Oct. 24, 1995	[JP]	Japan	7-299111

[51] **Int. Cl.**[6] **H05B 33/04**; H05B 33/14

[52] **U.S. Cl.** **313/504**; 313/506; 313/512; 345/76; 315/169.3; 428/917

[58] **Field of Search** 313/504, 501, 313/506, 509, 512; 428/917; 345/76, 36, 45; 315/169.3; 257/40

[56] **References Cited**

U.S. PATENT DOCUMENTS

5,294,870	3/1994	Tang et al.	313/504
5,693,956	12/1997	Shi et al.	257/40

Primary Examiner—Sandra O'Shea
Assistant Examiner—Michael Day
Attorney, Agent, or Firm—Oblon, Spivak, McClelland, Maier & Neustadt, P.C.

[57] **ABSTRACT**

This invention provides a multi-color light emission apparatus wherein a transparent inorganic oxide substrate **(4)** is disposed between an organic EL device **(1)** and a fluorescent layer **(3)** in such a manner as to arrange the fluorescent layer **(3)** with a gap with the organic EL device **(1)**, and the organic EL device **(1)** is sealed by sealing means **(5)** between the transparent inorganic oxide substrate **(4)** and a support substrate **(2)**. The invention provides also a multi-color light emission apparatus wherein a transparent insulating inorganic oxide layer **(12)** having a thickness of 0.01 to 200 μm is interposed between the fluorescent layer **(3)** and the organic EL device **(1)**. In this way, light emission life and angle-of-view characteristics can be improved.
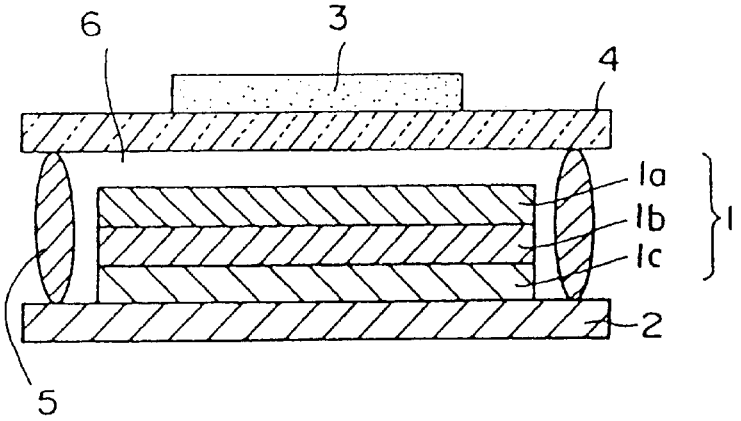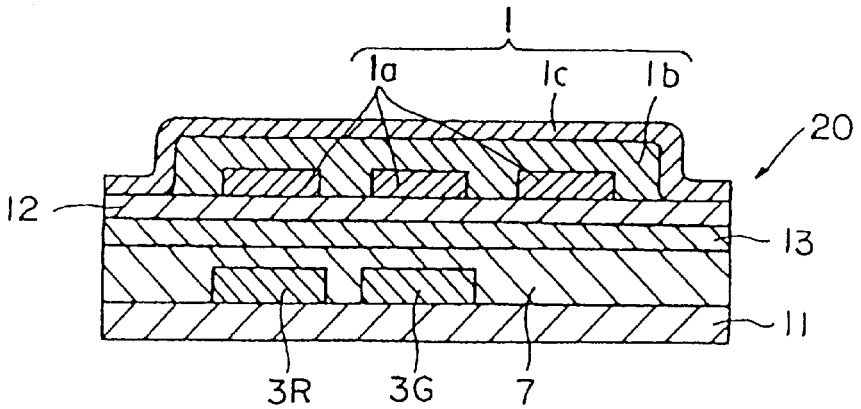
10 Claims, 6 Drawing Sheets