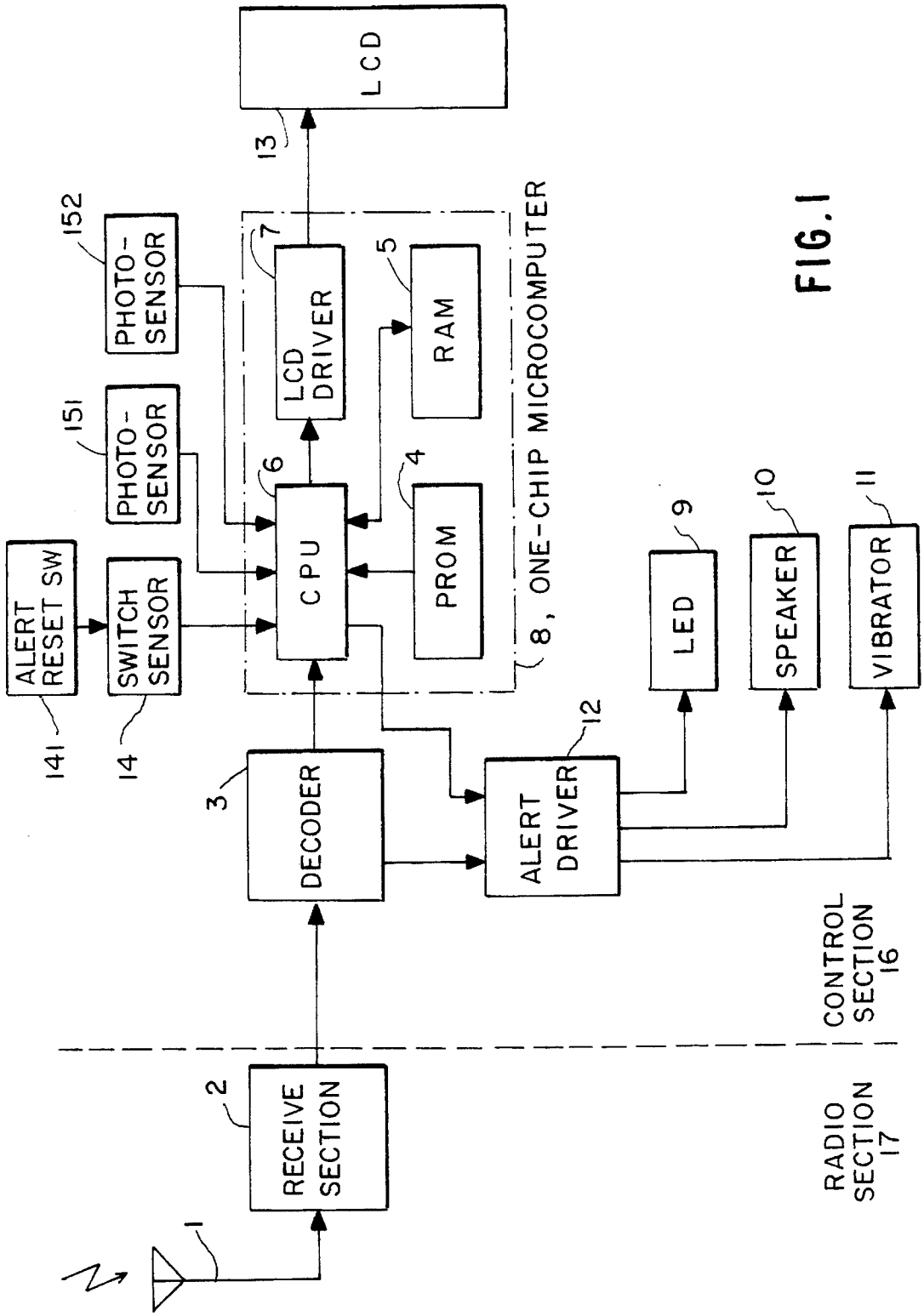
LCD
13
152
PHOTO-SENSOR
7
LCD DRIVER
5
RAM
151
PHOTO-SENSOR
6
CPU
4
PROM
8, ONE-CHIP MICROCOMPUTER
ALERT RESET SW
SWITCH SENSOR
141
14
3
DECODER
12
ALERT DRIVER
9
LED
10
SPEAKER
11
VIBRATOR
CONTROL SECTION 16
2
RECEIVE SECTION
1
RADIO SECTION 17

FIG. 1