June 22, 1954 J. J. DIXON, SR 2,681,480

FINGER GUARD FOR SWINGING DOORS

Filed June 3, 1953

Fig. 1

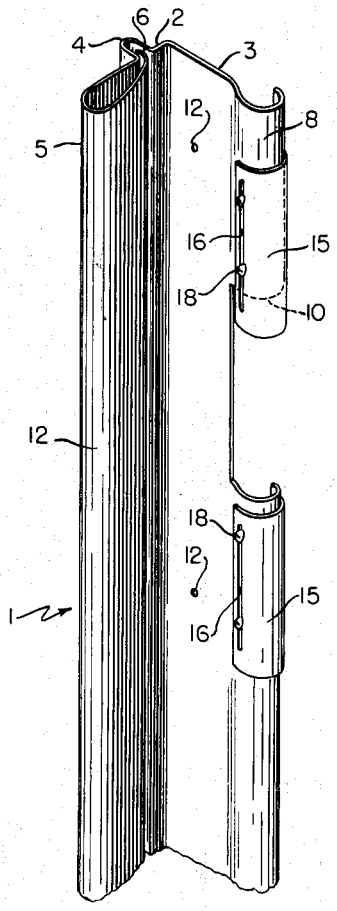

Fig. 2

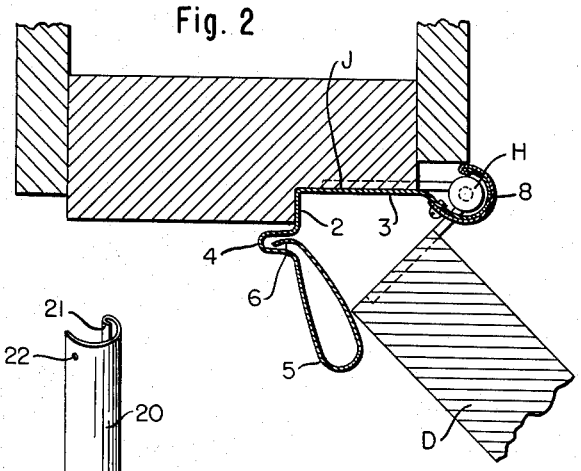

Fig. 4

Fig. 3

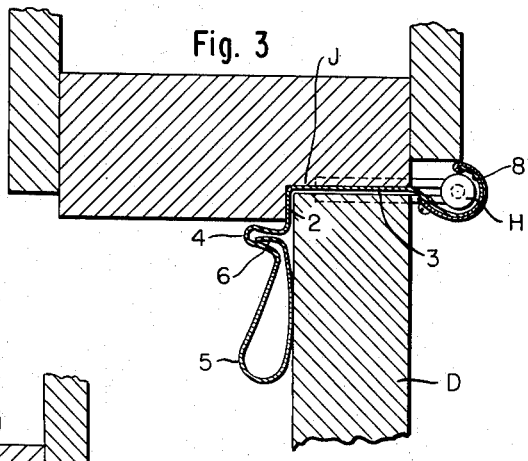

Fig. 5

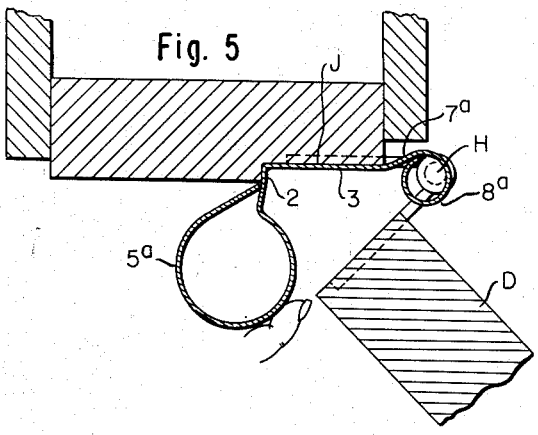

INVENTOR.
JOHN J. DIXON, SR.

BY Kenway, Jenney, Witter & Hildreth

ATTORNEYS