US00D366280S

United States Patent [19]

Henderson

[11] **Patent Number: Des. 366,280**

[45] **Date of Patent: **Jan. 16, 1996**

[54] **LUMINOUS DRAWING SURFACE AND NIGHT LIGHT**

[76] Inventor: **Darryl R. Henderson**, 7443 Little Pond Ct., Orlando, Fla. 32810

[**] Term: **14 Years**

[21] Appl. No.: **36,307**

[22] Filed: **Mar. 17, 1995**

[52] **U.S. Cl.** **D19/52**; D19/35; D19/83; D19/36; D26/58; D14/106; D28/83

[58] **Field of Search** D14/100, 106, D14/114; D19/35, 36, 59, 60, 65, 81–84; D21/59; D26/56, 58; 362/97–99, 33, 84; 434/81, 85, 88, 430; D28/64.3, 77, 78, 83

[56] **References Cited**

U.S. PATENT DOCUMENTS

D. 214,279	5/1969	Schoenfield	D19/52
D. 260,305	5/1981	MacGregor et al.	D28/83 X
D. 271,027	10/1983	Tripp	D19/52
D. 277,418	1/1985	Henrich, Jr. et al.	D28/83 X
D. 278,918	5/1985	Morcheles	D19/52
D. 314,980	2/1991	Leung	D19/60
D. 321,175	10/1991	Tsuchiya	D19/60 X
D. 344,975	3/1994	Tarozzi	D19/36
D. 346,793	5/1994	Iino et al.	D14/100
D. 352,065	11/1994	Kobzeff	D26/58 X
3,443,332	5/1969	Christy .	
4,195,431	4/1980	Neufeld .	
4,590,381	5/1986	Mendelson .	
5,203,702	4/1993	Wilson .	

FOREIGN PATENT DOCUMENTS

WO93/14943 8/1993 WIPO .

Primary Examiner—Martie Thompson
Attorney, Agent, or Firm—Richard C. Litman

[57] **CLAIM**

The ornamental design for a luminous drawing surface and night light, as shown and described.

DESCRIPTION

FIG. **1** is a front perspective view of a luminous drawing surface and night light showing my new design;
FIG. **2** is a rear perspective view thereof in a closed position;
FIG. **3** is a front elevational view of FIG. **1** with the top view being a mirror image thereof;
FIG. **4** is a rear elevational view with the bottom view being a mirror image thereof; and,
FIG. **5** is a left side elevational view with the right side being a mirror image thereof.
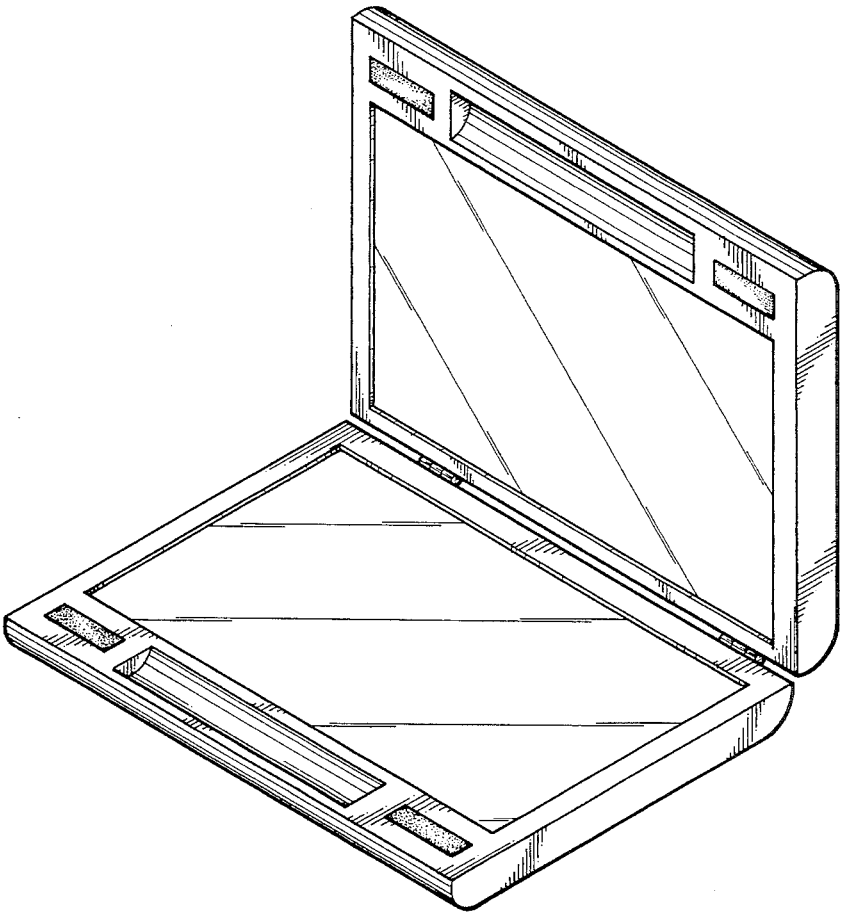
1 Claim, 3 Drawing Sheets