May 29, 1934. C. A. SABBAH 1,961,080

ELECTRIC VALVE CONVERTING SYSTEM

Filed May 5, 1933

Fig. 1.

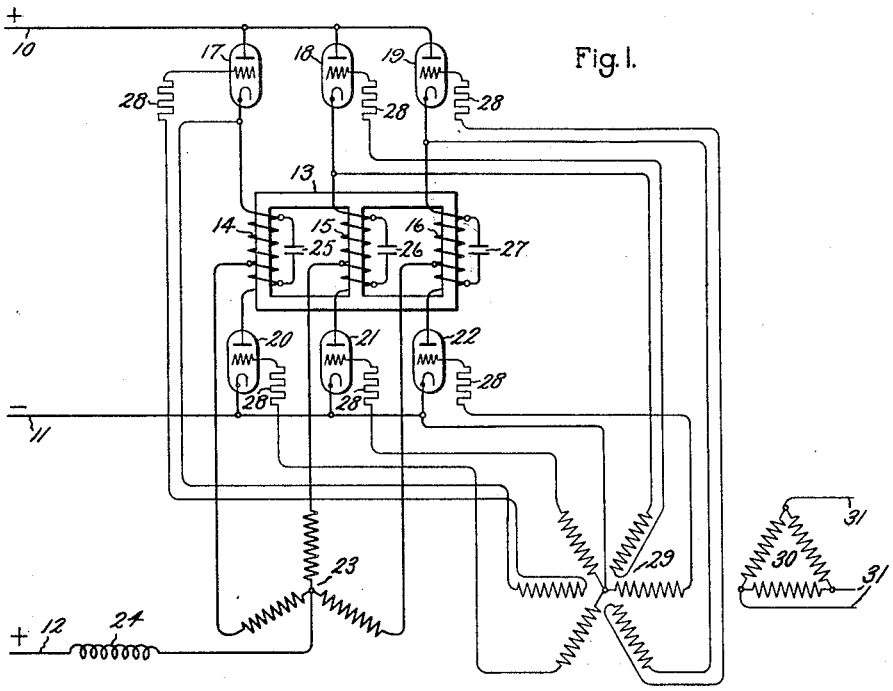

Fig. 2.

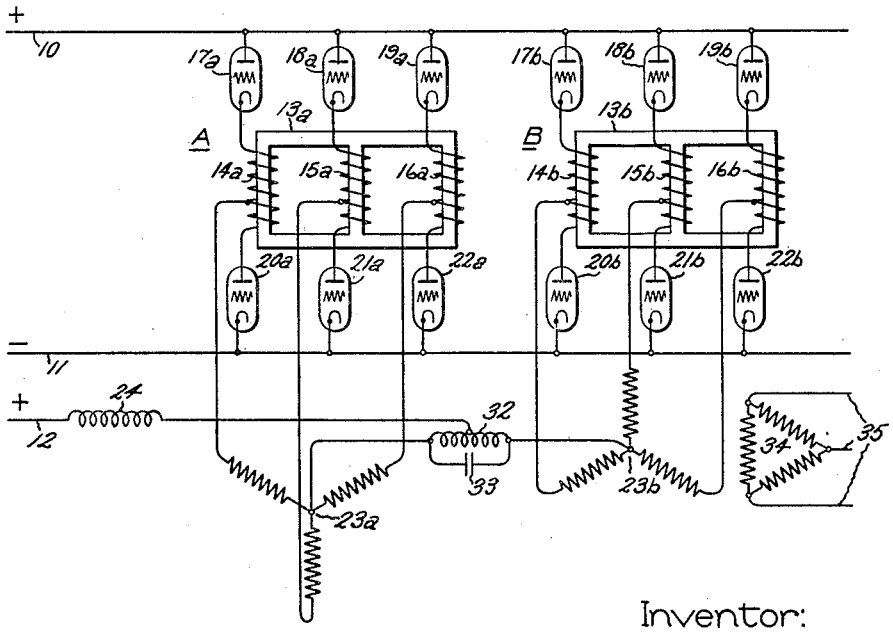

Inventor:
Camil A. Sabbah,
by Charles C. Mullen
His Attorney.