US007056480B2

(12) **United States Patent**
Ogawa

(10) **Patent No.: US 7,056,480 B2**
(45) **Date of Patent: Jun. 6, 2006**

(54) **FUEL REFORMING SYSTEM**

(75) Inventor: **Hiroshi Ogawa**, Yokohama (JP)

(73) Assignee: **Nissan Motor Co., Ltd.**, Kanagawa (JP)

(*) Notice: Subject to any disclaimer, the term of this patent is extended or adjusted under 35 U.S.C. 154(b) by 645 days.

(21) Appl. No.: **10/332,278**

(22) PCT Filed: **Aug. 21, 2002**

(86) PCT No.: **PCT/JP02/08405**

§ 371 (c)(1),
(2), (4) Date: **Jan. 7, 2003**

(87) PCT Pub. No.: **WO03/027006**

PCT Pub. Date: **Apr. 3, 2003**

(65) **Prior Publication Data**

US 2004/0101720 A1 May 27, 2004

(30) **Foreign Application Priority Data**

Sep. 19, 2001 (JP) 2001-284350

(51) **Int. Cl.**

B01J 8/00	(2006.01)
B01J 8/02	(2006.01)
G05D 7/00	(2006.01)
G05D 23/00	(2006.01)

(52) **U.S. Cl.** **422/197**; 422/108; 422/109; 422/110; 422/111; 422/112; 422/113; 422/114; 422/115; 422/116; 422/188; 422/181; 422/182; 422/82.12; 422/198; 422/305; 423/66; 48/191

(58) **Field of Classification Search** 422/108, 422/109, 110, 111, 112, 113, 114, 115, 116, 422/197; 423/66; 48/191

See application file for complete search history.

(56) **References Cited**

U.S. PATENT DOCUMENTS

5,897,970 A	4/1999	Isomura et al.	
6,231,831 B1 *	5/2001	Autenrieth et al.	423/648.1

FOREIGN PATENT DOCUMENTS

DE	197 57 506 A1	7/1999
DE	199 020 926 A1	8/2000
EP	0 924 161 A2	6/1999
JP	2001-135336	5/2001

* cited by examiner

Primary Examiner—Alexa D. Neckel
Assistant Examiner—Kaity V. Handal
(74) *Attorney, Agent, or Firm*—McDermott Will & Emery LLP

(57) **ABSTRACT**

A fuel reforming system comprises a reforming catalyst section (**4**) performing reformate reactions on supplied fuel gas, a membrane hydrogen separator (**5**) extracting hydrogen from the reformate gas, a supply device (**8–14**) supplying combustion gas for heating the membrane reactor (**2**), a sensor (**16**) for detecting the temperature of the membrane hydrogen separator (**5**) and a controller. The supply device supplies combustion gas to the membrane reactor (**2**) before the reforming catalyst section starts reformate reactions during startup of the membrane reactor (**2**). Furthermore the supply device stops supply of combustion gas to the membrane reactor (**2**) when the temperature of the membrane hydrogen separator (**5**) is greater than or equal to a target temperature. Thereafter the fuel supply device supplies fuel to the fuel reforming catalyst section (**4**). In this manner, hydrogen embrittlement in the membrane hydrogen separator can be avoided.
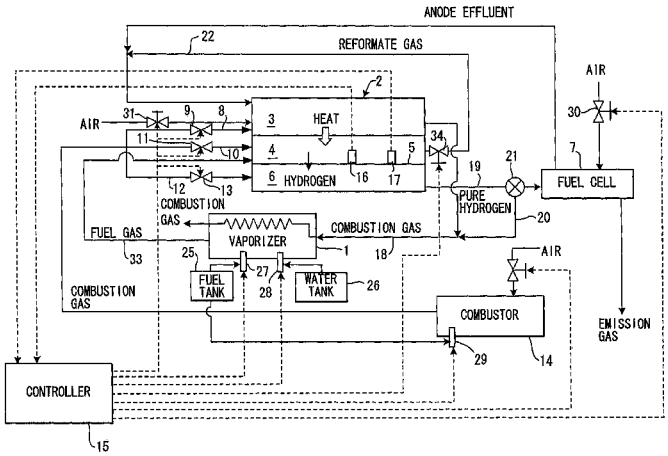
13 Claims, 5 Drawing Sheets