COMBINED WALL AWNING STRUCTURE

Filed July 21, 1965 2 Sheets-Sheet 1

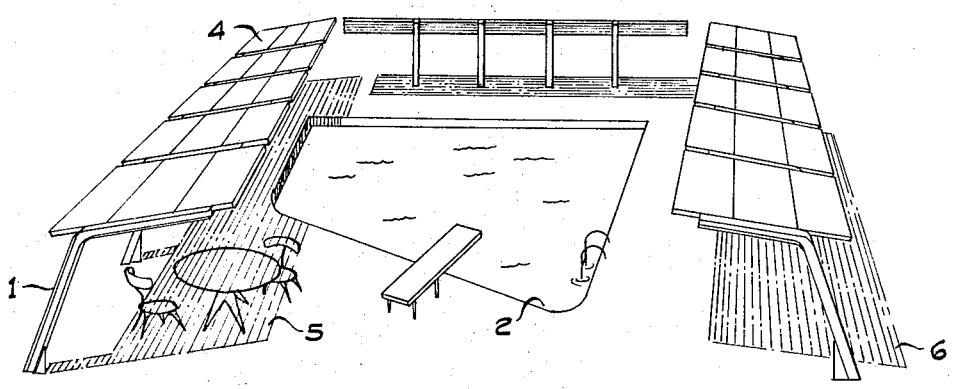

Fig. 1

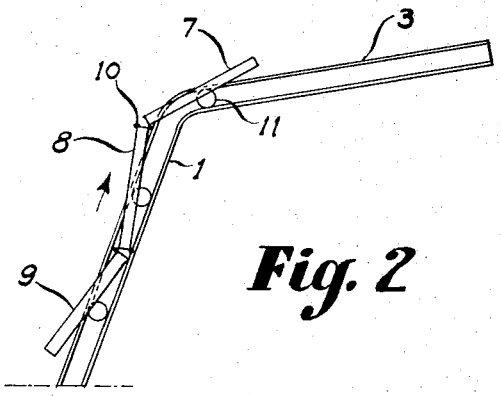

Fig. 2

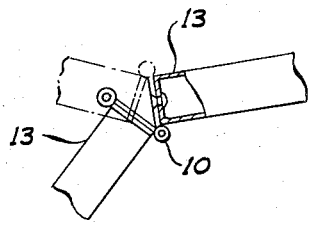

Fig. 4

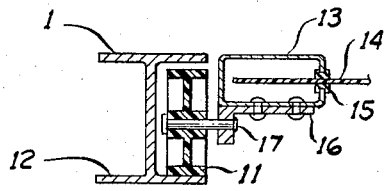

Fig. 5

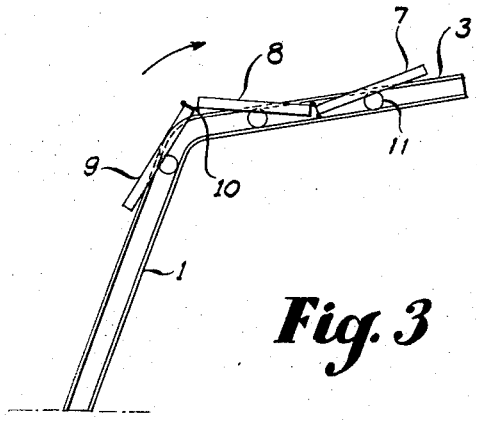

Fig. 3

INVENTOR.
JOHN C. DASHIO
BY William B. Jaspert
Attorney