Nov. 1, 1938. J. ERICKSON 2,135,280

HINGE

Filed Aug. 27, 1936

Fig. 1.

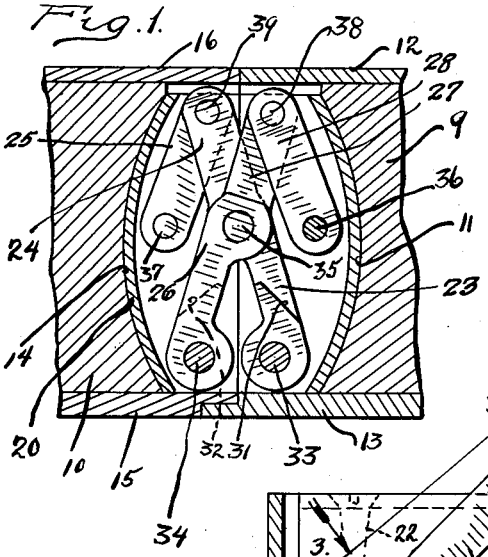

Fig. 2.

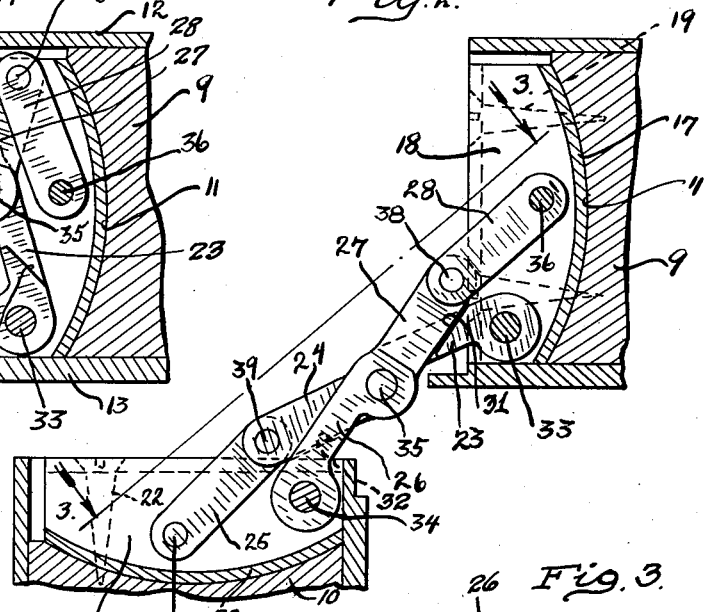

Fig. 3.

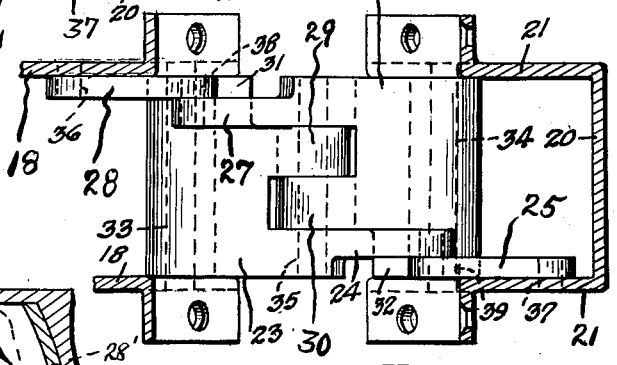

Fig. 4.

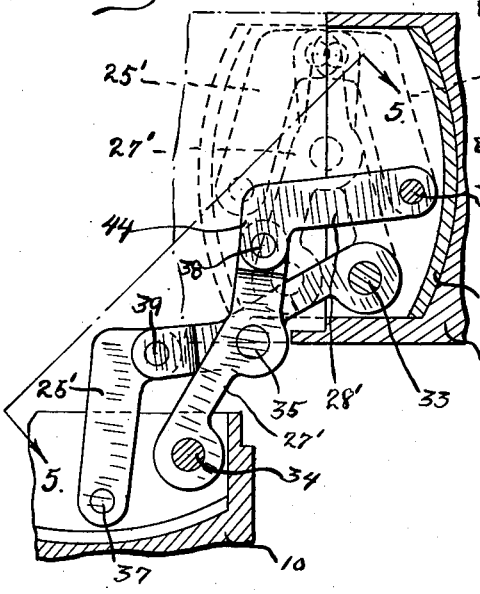

Fig. 5.

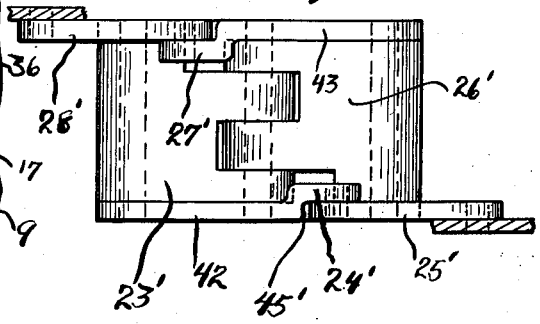

INVENTOR.
JOHN ERICKSON.
BY
G. Thos. Dennelly
ATTORNEY.