US009410980B2

(12) **United States Patent**
Sahadeo et al.

(10) **Patent No.: US 9,410,980 B2**
(45) **Date of Patent: Aug. 9, 2016**

(54) **WORK MONITORING SYSTEM**

(71) Applicant: **Toyota Motor Engineering & Manufacturing North America, Inc**, Erlanger, KY (US)

(72) Inventors: **Rick V. Sahadeo**, Waterloo (CA); **Gary Lee**, Cambridge (CA); **Ajanthan Subramaniam**, Markham (CA); **Joel V. Jacob**, Waterloo (CA); **Yang Lin**, Nepean, CA (US)

(73) Assignee: **Toyota Motor Engineering & Manufacturing North America, Inc.**, Erlanger, KY (US)

(*) Notice: Subject to any disclaimer, the term of this patent is extended or adjusted under 35 U.S.C. 154(b) by 205 days.

(21) Appl. No.: **13/771,576**

(22) Filed: **Feb. 20, 2013**

(65) **Prior Publication Data**

US 2014/0232828 A1 Aug. 21, 2014

(51) **Int. Cl.**

G01P 13/00	(2006.01)
G06K 9/00	(2006.01)
B62D 65/18	(2006.01)
B25J 11/00	(2006.01)

(52) **U.S. Cl.**

CPC ***G01P 13/00*** (2013.01)

(58) **Field of Classification Search**

CPC H04N 5/225; G06K 9/00; A63F 13/00; B25J 11/00; B62D 65/18

See application file for complete search history.

(56) **References Cited**

U.S. PATENT DOCUMENTS

4,909,869	A *	3/1990	Sakamoto	B62D 65/06 156/108
5,734,742	A	3/1998	Asaeda et al.	
7,313,270	B2	12/2007	Sones	
7,652,582	B2	1/2010	Littell	
7,756,293	B2	7/2010	Kuwabara et al.	
8,111,239	B2	2/2012	Pryor et al.	
8,213,680	B2	7/2012	Fitzgibbon et al.	
8,267,781	B2	9/2012	Geiss	
8,295,549	B2	10/2012	Marks et al.	
2010/0199228	A1	8/2010	Latta et al.	
2010/0303337	A1 *	12/2010	Wallack et al.	382/154
2011/0050878	A1	3/2011	Wells et al.	
2011/0308075	A1 *	12/2011	Tohyama	B62D 65/18 29/795

OTHER PUBLICATIONS

Screenshot of "Raving Rabbids TV Party" Wii video game; printed from http://wii.gamespy.com/wii/rayman-4/747571p2.html on Jan. 10, 2012 in 1 page.

* cited by examiner

Primary Examiner — Sath V Perungavoor
Assistant Examiner — Patricia I Young
(74) *Attorney, Agent, or Firm* — Christopher G. Darrow; Darrow Mustafa PC

(57) **ABSTRACT**

A system and methods for monitoring work processes. Once example computer-implemented method includes recording a three-dimensional work trajectory. The work trajectory comprises a representation of the actual motion of one or more markers. The method further includes comparing the work trajectory to a work template. The work template comprises a representation of the desired motion of the one or more markers. The method further includes sending a success indication to a display when the work trajectory is similar to the work template and sending a failure indication to the display when the work trajectory is dissimilar to the work template.
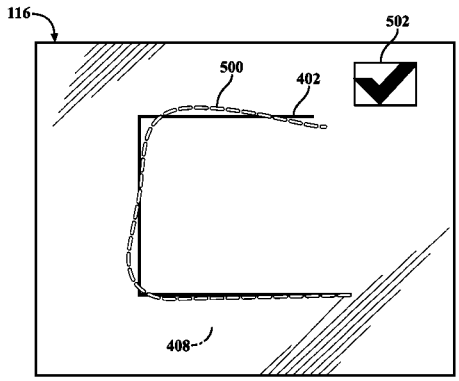
13 Claims, 4 Drawing Sheets