US009410680B2

(12) **United States Patent**
Ng et al.

(10) **Patent No.: US 9,410,680 B2**
(45) **Date of Patent: Aug. 9, 2016**

(54) **ILLUMINATION DEVICES WITH ADJUSTABLE OPTICAL ELEMENTS**

(71) Applicant: **Quarkstar LLC**, Las Vegas, NV (US)

(72) Inventors: **Andrew Tien-Man Ng**, Vancouver (CA); **Ingo Speier**, Saanichton (CA); **Wilson Dau**, Calgary (CA); **Louis Lerman**, Las Vegas, NV (US); **Hans Peter Stormberg**, Stolberg (DE)

(73) Assignee: **Quarkstar LLC**, Las Vegas, NV (US)

(*) Notice: Subject to any disclaimer, the term of this patent is extended or adjusted under 35 U.S.C. 154(b) by 0 days.

(21) Appl. No.: **14/418,194**

(22) PCT Filed: **Apr. 17, 2014**

(86) PCT No.: **PCT/US2014/034555**

§ 371 (c)(1),
(2) Date: **Jan. 29, 2015**

(87) PCT Pub. No.: **WO2014/172571**

PCT Pub. Date: **Oct. 23, 2014**

(65) **Prior Publication Data**

US 2015/0167940 A1 Jun. 18, 2015

Related U.S. Application Data

(60) Provisional application No. 61/814,145, filed on Apr. 19, 2013.

(51) **Int. Cl.**
F21V 13/04 (2006.01)
F21V 19/02 (2006.01)
(Continued)

(52) **U.S. Cl.**
CPC ***F21V 19/02*** (2013.01); ***F21K 9/1355*** (2013.01); ***F21S 6/002*** (2013.01); ***F21S 6/007*** (2013.01);
(Continued)

(58) **Field of Classification Search**
CPC F21K 9/1355; F21K 9/12; F21K 9/175; F21S 6/002; F21S 6/007; F21V 13/04; F21V 14/02; F21V 19/02; F21V 19/0055; F21V 21/22
See application file for complete search history.

(56) **References Cited**

U.S. PATENT DOCUMENTS

2,194,841 A 3/1940 Welch
2,626,120 A 1/1953 Baker
(Continued)

FOREIGN PATENT DOCUMENTS

CA 2 702 690 11/2010
DE 199 17 401 10/2000
(Continued)

OTHER PUBLICATIONS

Notification of Transmittal of the International Search Report and the Written Opinion of the International Searching Authority, International Application No. PCT/US2014/034555, mailed Nov. 27, 2014, 12 pages.
(Continued)

Primary Examiner — Julie Bannan
(74) *Attorney, Agent, or Firm* — Fish & Richardson P.C.

(57) **ABSTRACT**

Illumination devices with adjustable optical elements configured to provide a variable illumination pattern of an area are described. The adjustable optical elements of the illumination devices can be traversed relative to a surface (e.g., a ceiling of a room) to vary the light distribution and/or intensity to the surface.
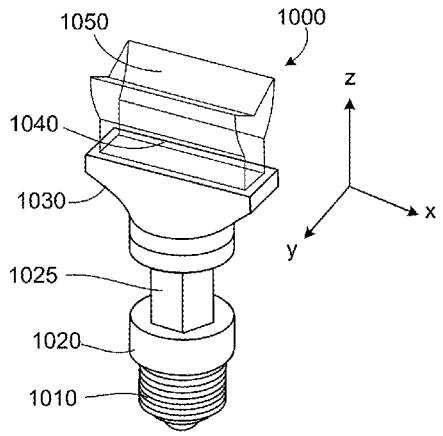
11 Claims, 19 Drawing Sheets