US009410580B2

(12) **United States Patent**
Berens et al.

(10) **Patent No.: US 9,410,580 B2**
(45) **Date of Patent: Aug. 9, 2016**

(54) **MECHANICAL SYSTEM EQUIPPED WITH ACTIVE MICROCAPSULES FOR CONDITION MONITORING**

(71) Applicants: **Frank Berens**, Saunay (FR); **Laurent Varnoux**, Saint Avertin (FR); **Olivier Verbe**, Tours (FR)

(72) Inventors: **Frank Berens**, Saunay (FR); **Laurent Varnoux**, Saint Avertin (FR); **Olivier Verbe**, Tours (FR)

(73) Assignee: **AKTIEBOLAGET SKF**, Gothenburg (SE)

(*) Notice: Subject to any disclaimer, the term of this patent is extended or adjusted under 35 U.S.C. 154(b) by 0 days.

(21) Appl. No.: **14/703,005**

(22) Filed: **May 4, 2015**

(65) **Prior Publication Data**

US 2015/0323010 A1 Nov. 12, 2015

(30) **Foreign Application Priority Data**

May 6, 2014 (FR) 14 01031

(51) **Int. Cl.**

F16C 33/66	(2006.01)
F16C 41/00	(2006.01)
C10M 109/00	(2006.01)
F16C 19/52	(2006.01)
F16C 33/10	(2006.01)
F01M 9/02	(2006.01)
F16C 19/06	(2006.01)

(52) **U.S. Cl.**

CPC ***F16C 33/6688*** (2013.01); ***C10M 109/00*** (2013.01); ***F16C 19/52*** (2013.01); ***F16C 19/525*** (2013.01); ***F16C 33/109*** (2013.01); ***F16C 33/1045*** (2013.01); ***F16C 33/6659*** (2013.01); ***F16C 33/6696*** (2013.01); ***F16C 41/008*** (2013.01); *C10N 2250/16* (2013.01); *F01M 9/02* (2013.01); *F16C 19/06* (2013.01); *F16C 2233/00* (2013.01)

(58) **Field of Classification Search**

CPC F16C 33/6633; F16C 33/6688

See application file for complete search history.

(56) **References Cited**

FOREIGN PATENT DOCUMENTS

JP	2005036212	A	2/2005
JP	2006009837	A	1/2006
JP	2006064059	A	3/2006
JP	2008094975	A	4/2008
WO	2006065695	A2	6/2006

Primary Examiner — Thomas R. Hannon

(74) *Attorney, Agent, or Firm* — Bryan Peckjian; SKF USA Inc. Patent Dept.

(57) **ABSTRACT**

A mechanical system comprising at least one moving component and a lubricant. The mechanical system also comprises a plurality of at least one type of microcapsule consisting of a shell, which, under the effect of a variation of a given characteristic physical parameter of the mechanical system, is capable of releasing particles. The dispersion of the particles is identifiable by a system located external to the mechanical system.
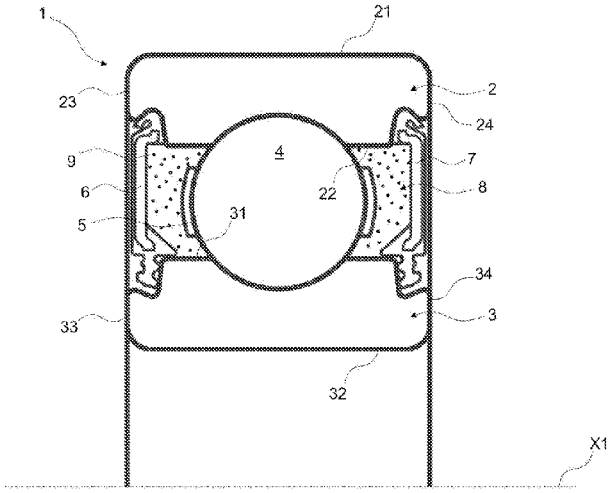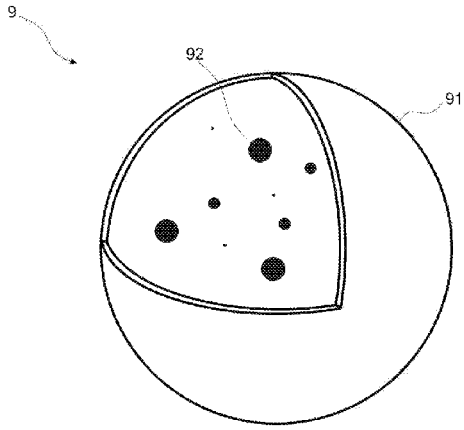
10 Claims, 1 Drawing Sheet