US009410380B2

(12) **United States Patent**
Rutter et al.

(10) **Patent No.: US 9,410,380 B2**
(45) **Date of Patent: Aug. 9, 2016**

(54) **SYSTEMS AND METHODS FOR PROVIDING FIBER OPTICS IN DOWNHOLE EQUIPMENT**

(71) Applicant: **Baker Hughes Incorporated**, Houston, TX (US)

(72) Inventors: **Risa Rutter**, Claremore, OK (US); **Ketankumar K. Sheth**, Tulsa, OK (US); **Suresha R. O'Bryan**, Joplin, MO (US)

(73) Assignee: **Baker Hughes Incorporated**, Houston, TX (US)

(*) Notice: Subject to any disclaimer, the term of this patent is extended or adjusted under 35 U.S.C. 154(b) by 548 days.

(21) Appl. No.: **13/875,648**

(22) Filed: **May 2, 2013**

(65) **Prior Publication Data**

US 2014/0326466 A1 Nov. 6, 2014

(51) **Int. Cl.**

E21B 17/20	(2006.01)
E21B 17/02	(2006.01)
E21B 47/00	(2012.01)

(52) **U.S. Cl.**

CPC ***E21B 17/023*** (2013.01); ***E21B 47/0007*** (2013.01)

(58) **Field of Classification Search**

CPC . E21B 47/123; E21B 17/023; E21B 17/1035; E21B 17/206; G02B 6/3816; G02B 6/38

See application file for complete search history.

(56) **References Cited**

U.S. PATENT DOCUMENTS

4,483,584	A *	11/1984	Gresty	G02B 6/25	385/64
4,756,595	A *	7/1988	Braun	G02B 6/3816	385/138
4,887,883	A *	12/1989	Darbut	G02B 6/3816	385/58
5,892,860	A *	4/1999	Maron	G01D 5/35383	374/E5.034
5,947,198	A *	9/1999	McKee	E21B 17/023	166/377
6,571,046	B1 *	5/2003	Hickey	E21B 17/003	385/134
6,888,124	B1	5/2005	Smith		
7,208,855	B1 *	4/2007	Floyd	E21B 43/128	166/66.4
7,740,064	B2	6/2010	McCoy et al.		
7,798,212	B2 *	9/2010	Bolze	E21B 17/02	166/242.1
8,523,454	B2 *	9/2013	Ringgenberg	G02B 6/2558	385/53
8,752,635	B2 *	6/2014	Wang	E21B 17/026	166/242.6
8,982,354	B2 *	3/2015	O'Bryan	G01M 15/00	356/446
2002/0014340	A1 *	2/2002	Johnson	E21B 17/00	166/380
2003/0081917	A1 *	5/2003	Bussear	E21B 47/123	385/101
2012/0170613	A1 *	7/2012	Ringgenberg	G02B 6/2558	374/161
2014/0326466	A1 *	11/2014	Rutter	E21B 17/023	166/378

* cited by examiner

Primary Examiner — Daniel P Stephenson

(74) *Attorney, Agent, or Firm* — Law Offices of Mark L. Berrier

(57) **ABSTRACT**

Systems and methods for installing an optical fiber in a downhole equipment system having multiple components that are installed in the field. Components such as sections of an ESP motor are assembled, forming a continuous sealed conduit that extends through the components. The conduit is sealed to prevent potentially damaging fluids from leaking into the conduit. After the conduit through the components is formed, an optical fiber is inserted into the conduit so that the fiber spans the connections between the components. The optical fiber may incorporate multiple sensors (e.g., fiber Bragg gratings) that can sense parameters such as temperature at multiple points in the different components. The passageways through the different components may have different diameters or tapered/chamfered edges to facilitate insertion of the optical fiber in the conduit.
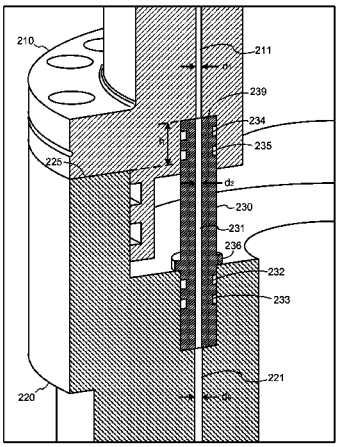
7 Claims, 5 Drawing Sheets