United States Patent [19]

Tunc

[11] **Patent Number: 4,905,680**

[45] **Date of Patent: Mar. 6, 1990**

[54] **ABSORBABLE BONE PLATE**

[75] Inventor: **Deger Tunc**, East Brunswick, N.J.

[73] Assignee: **Johnson & Johnson Orthopaedics, Inc.**, New Brunswick, N.J.

[21] Appl. No.: **224,047**

[22] Filed: **Jul. 25, 1988**

Related U.S. Application Data

[63] Continuation-in-part of Ser. No. 923,234, Oct. 27, 1986, abandoned.

[51] **Int. Cl.**[4] **A61B 17/58**

[52] **U.S. Cl.** **606/69**; 606/77

[58] **Field of Search** ..... 128/92 YP, 92 YL, 92 YQ, 128/92 YG, 92 YR, 92 YN

[56] **References Cited**

U.S. PATENT DOCUMENTS

1,105,105	7/1914	Sherman	128/92 YP
3,463,148	1/1966	Treace	128/92 YP
3,528,085	9/1970	Reynolds, Jr.	128/92 YP
4,219,015	8/1980	Steinemann	128/92 YP
4,403,607	9/1983	Woo et al.	128/92 YP
4,411,027	10/1983	Alexander et al.	623/16
4,429,690	2/1984	Angelino-Pievani	128/92 YP

OTHER PUBLICATIONS

Vitallium Surgical Appliances, 128 92YP, Mar. 1948, p. 7.

Primary Examiner—Robert A. Hafer
Assistant Examiner—Kevin G. Rooney
Attorney, Agent, or Firm—Michael Q. Tatlow

[57] **ABSTRACT**

An absorbable bone plate resistant to breakage fabricated with such interrelated dimensions that the highest stresses developed along the length of the plate when the plate is implanted are relatively constant and do not vary by more than 20% and preferably do not vary by more than 10%.
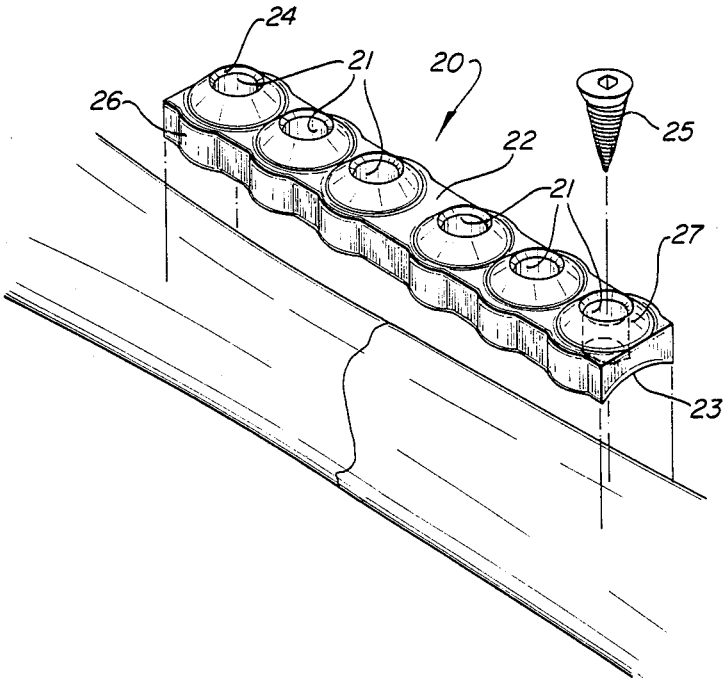
8 Claims, 3 Drawing Sheets