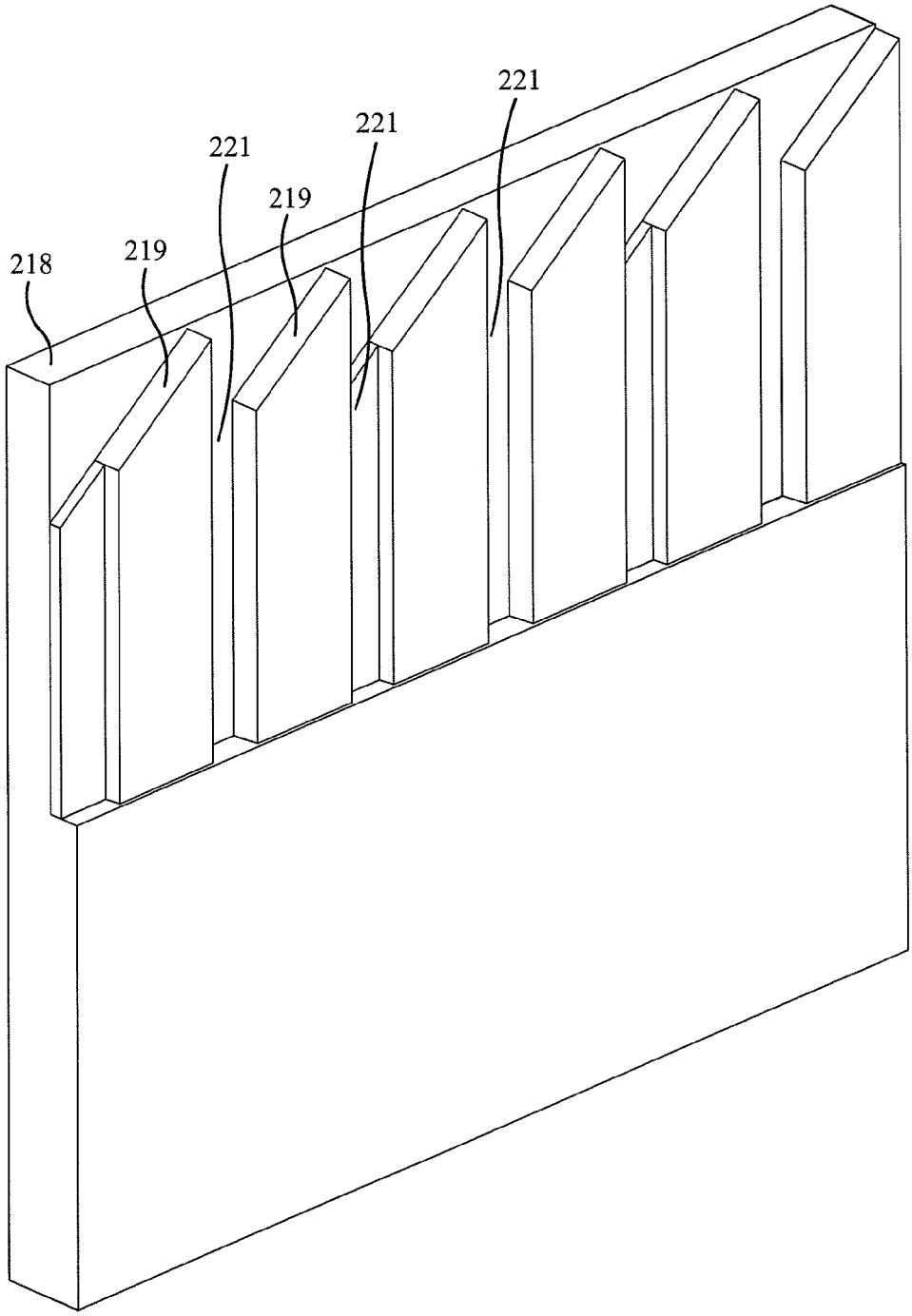

Figure 10