Jan. 18, 1955 H. P. MUNGER 2,699,679

ATMOSPHERIC CONTAMINANT COLLECTOR

Filed Jan. 9, 1951 3 Sheets-Sheet 1

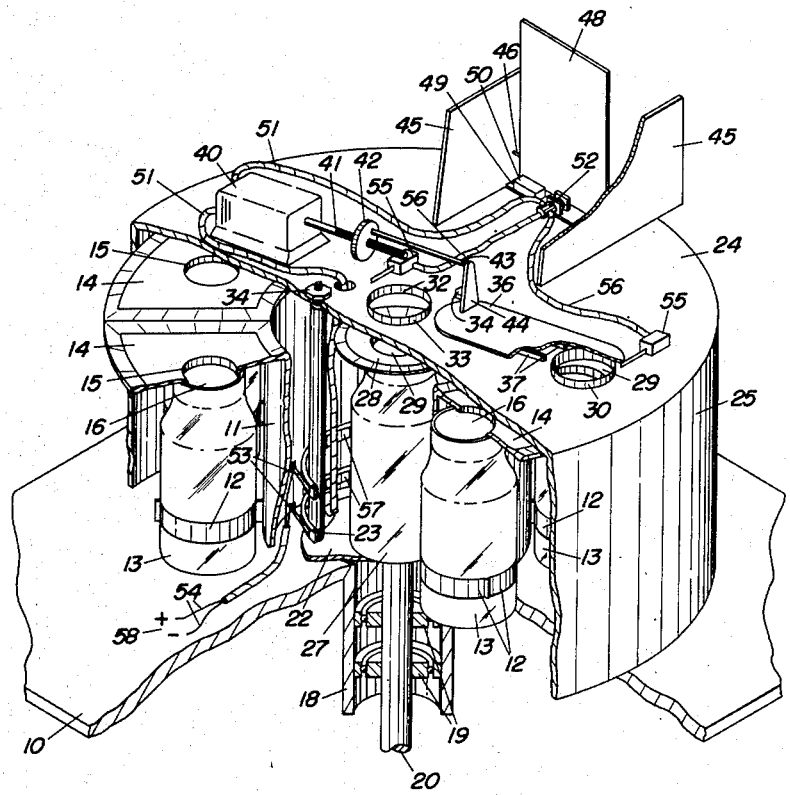

FIGURE 1

INVENTOR.
Hamnett P. Munger
BY Adams, Stevens + Mace
AGENTS.