Sept. 5, 1961 G. H. SNYDER, JR 2,998,879

SLIDE CONTAINER

Filed June 24, 1957

FIG. 1.

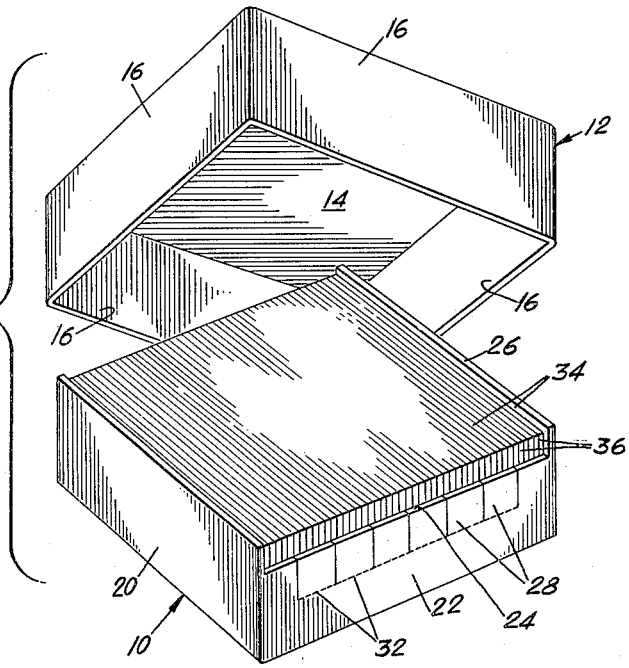

FIG. 2.

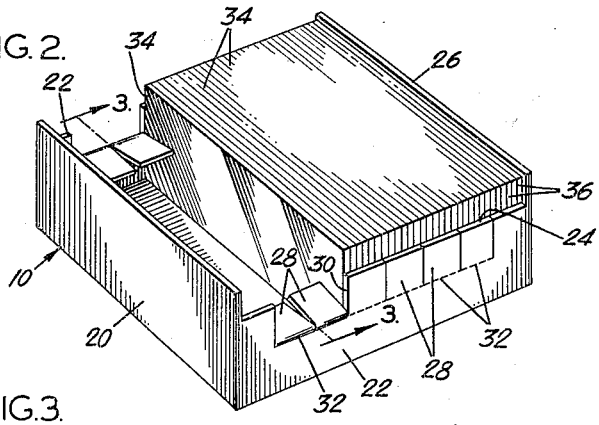

FIG. 3.

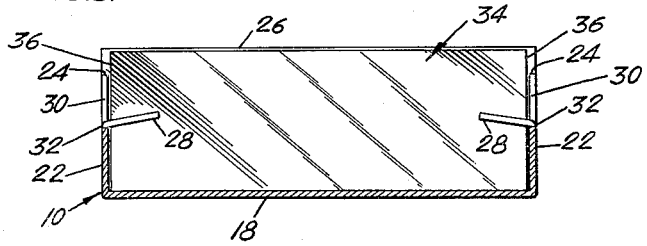

INVENTOR:
GEORGE H. SNYDER JR.

BY Howson & Howson
ATTYS.