US008197579B2

(12) **United States Patent**
Miller

(10) **Patent No.: US 8,197,579 B2**
(45) **Date of Patent: Jun. 12, 2012**

(54) **GAS STORAGE AND RELEASE USING PIEZOELECTRIC MATERIALS**

(75) Inventor: **Seth Adrian Miller**, Englewood, CO (US)

(73) Assignee: **Empire Technology Development LLC**, Wilmington, DE (US)

(*) Notice: Subject to any disclaimer, the term of this patent is extended or adjusted under 35 U.S.C. 154(b) by 479 days.

(21) Appl. No.: **12/488,200**

(22) Filed: **Jun. 19, 2009**

(65) **Prior Publication Data**

US 2010/0322837 A1 Dec. 23, 2010

(51) **Int. Cl.**
B03C 3/155 (2006.01)

(52) **U.S. Cl.** **96/68**; 95/61; 95/68; 95/116; 95/139; 96/69; 96/122; 96/130; 96/143; 96/153; 96/154; 429/411

(58) **Field of Classification Search** 96/66, 68, 96/69, 122, 130, 143, 153, 154; 95/61, 68, 95/116, 128, 131, 139; 429/410–412; 60/275, 60/311
See application file for complete search history.

(56) **References Cited**

U.S. PATENT DOCUMENTS

4,406,672	A *	9/1983	Berz	95/68
4,654,054	A *	3/1987	Snaddon et al.	96/68
4,877,506	A *	10/1989	Fee et al.	204/242
5,474,600	A *	12/1995	Volodina et al.	96/57
6,749,669	B1 *	6/2004	Griffiths et al.	96/67
7,510,600	B2 *	3/2009	Ibe et al.	96/52
2006/0191409	A1 *	8/2006	Fan et al.	95/61
2006/0272504	A1 *	12/2006	Nutsos	96/69
2009/0011312	A1 *	1/2009	Son	429/30
2009/0186258	A1 *	7/2009	Makita et al.	429/46

FOREIGN PATENT DOCUMENTS

JP 56-130208 A * 10/1981 ..... 96/66

OTHER PUBLICATIONS

Da-Wei Fu, Heng-Yun Ye, Qiong Ye, Ke-Ji Pan, Ren-Gen Xiong, Ferroelectric Metal-Organic Coordination Polymer with a High Dielectric Constant, Dalton Transactions, 2008, pp. 847-877, DOI: 10.1039/b714293e, RCS Publishing, USA.

Da-Wei Fu, Wen Zhang, Ren-Gen Xiong, The First Metal-Organic Framework (MOF) of Imazethapyr and its SHG, Piezoelectric and Ferroelectric Properties, Dalton Transactions, 2008, pp. 3946-3948, DOI: 10.1039/b806255b, RCS Publishing, USA.

Qiong Ye, Da-Wei Fu, Hang Tian, Ren-Gen Xiong, Phillip Wai Hong Chan, Songping D. Huang, Multiferroic Homochiral Metal-Organic Framework, Inorganic Chemistry, Jan. 4, 2008, pp. 772-774, DOI: 10.1021/ic701828w, ACS Publications, Washington, DC, USA.

Yun Liu, Houria Kabbour, Craig M. Brown, Dan A. Neumann, Channing C. Ahn, Increasing the Density of Adsorbed Hydrogen and Coordinatively Unsaturated Metal Centers in Metal-Organic Frameworks, Langmuir, Mar. 27, 2008, pp. 4772-4777, DOI: 10.1021/1a703864a, ACS Publications, Washington, DC, USA.

Basolite Metal Organic Frameworks—The World Record in Surface Area, BASF Future Business, www.basf-futurebusiness.com/en/projects/gas-storage.html, accessed Jun. 18, 2009.

Basolite Metal Organic Frameworks—The World Record in Surface Area Datasheet, http://www.basf-futurebusiness.com/fileadmin/user_upload/Projekte/MOF/BASF_Basolite_datasheet_061108_v2.pdf, accessed Jun. 18, 2009.

* cited by examiner

Primary Examiner — Richard L Chiesa

(57) **ABSTRACT**

Embodiments are described that generally relate to the storage and release of a gas using piezoelectric materials.
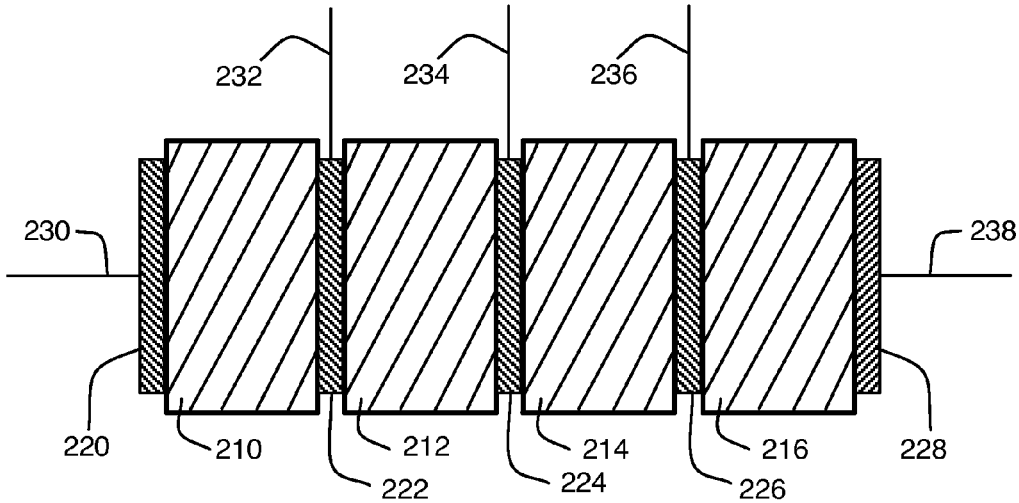
17 Claims, 4 Drawing Sheets