US008095879B2

(12) **United States Patent**
Goertz

(10) **Patent No.: US 8,095,879 B2**
(45) **Date of Patent: Jan. 10, 2012**

(54) **USER INTERFACE FOR MOBILE HANDHELD COMPUTER UNIT**

(75) Inventor: **Magnus Goertz**, Stockholm (SE)

(73) Assignee: **Neonode Inc.**, Santa Clara, CA (US)

(*) Notice: Subject to any disclaimer, the term of this patent is extended or adjusted under 35 U.S.C. 154(b) by 1228 days.

(21) Appl. No.: **10/315,250**

(22) Filed: **Dec. 10, 2002**

(65) **Prior Publication Data**

US 2004/0109013 A1 Jun. 10, 2004

(51) **Int. Cl.**
G06F 3/00 (2006.01)

(52) **U.S. Cl.** **715/716**; 715/864; 715/702

(58) **Field of Classification Search** 715/864, 715/702

See application file for complete search history.

(56) **References Cited**

U.S. PATENT DOCUMENTS

4,790,028	A	12/1988	Ramage	
5,053,758	A *	10/1991	Cornett et al.	345/174
5,283,558	A	2/1994	Chan	
5,406,307	A *	4/1995	Hirayama et al.	715/800
5,603,053	A *	2/1997	Gough et al.	710/5
5,900,875	A *	5/1999	Haitani et al.	715/840
5,956,030	A *	9/1999	Conrad et al.	715/769
6,052,279	A *	4/2000	Friend et al.	361/686
6,085,204	A *	7/2000	Chijiwa et al.	715/246
6,346,935	B1 *	2/2002	Nakajima et al.	345/173
6,542,191	B1 *	4/2003	Yonezawa	348/333.01
6,597,345	B2 *	7/2003	Hirshberg	345/168
6,639,584	B1	10/2003	Li	
6,727,917	B1 *	4/2004	Chew et al.	715/765
6,734,883	B1 *	5/2004	Wynn et al.	715/830
6,833,827	B2 *	12/2004	Lui et al.	345/173
6,988,246	B2 *	1/2006	Kopitzke et al.	715/810
7,006,077	B1 *	2/2006	Uusimaki	345/173
7,030,861	B1 *	4/2006	Westerman et al.	345/173

(Continued)

FOREIGN PATENT DOCUMENTS

EP 0 330 767 B1 10/1993

OTHER PUBLICATIONS

Carlson, Jeff. Visual Quickstart Guide Palm Organizers. Peachpit Press. 2000. Berkeley, CA. Pages xiii, 12, 25, 26, 28-30, 40, 47, 246 and 253.*

(Continued)

Primary Examiner — Ryan Pitaro
(74) *Attorney, Agent, or Firm* — Soquel Group LLC

(57) **ABSTRACT**

The present invention relates to a user interface for a mobile handheld computer unit, which computer unit comprises a touch sensitive area (**1**), which is divided into a menu area (**2**) and a display area (**3**). The computer unit is adapted to run several applications simultaneously and to present an active application on top of any other application on the display area (**3**). The menu area (**2**) is adapted to present a representation of a first (**21**), a second (**22**) and a third predefined (**23**) function. The first function (**21**) is a general application dependent function, the second function (**22**) is a keyboard function, and the third function (**23**) is a task and file manager. Any one of these three functions can be activated when the touch sensitive area (**1**) detects a movement of an object with its starting point within the representation of the function on the menu area (**2**) and with a direction from the menu area (**2**) to the display area (**3**).
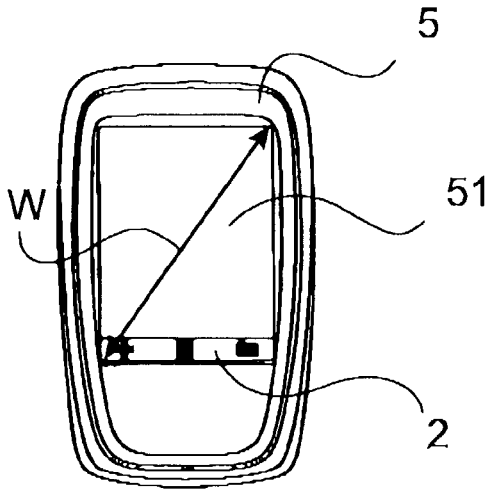
17 Claims, 4 Drawing Sheets