US008794579B2

(12) **United States Patent**
Sturman et al.

(10) **Patent No.: US 8,794,579 B2**
(45) **Date of Patent: Aug. 5, 2014**

(54) **SUPPORT ARM ASSEMBLY**

(75) Inventors: **Lane Sturman**, Allegan, MI (US); **Dan R. Tatman**, Jenison, MI (US); **Erik R. Peterson**, Spring Lake, MI (US); **Greg Lok**, Jension, MI (US)

(73) Assignee: **Steelcase, Inc.**, Grand Rapids, MI (US)

(*) Notice: Subject to any disclaimer, the term of this patent is extended or adjusted under 35 U.S.C. 154(b) by 1845 days.

(21) Appl. No.: **11/445,804**

(22) Filed: **Jun. 2, 2006**

(65) **Prior Publication Data**

US 2007/0040084 A1 Feb. 22, 2007

Related U.S. Application Data

(60) Provisional application No. 60/687,061, filed on Jun. 3, 2005.

(51) **Int. Cl.**
E04G 3/00 (2006.01)

(52) **U.S. Cl.**
USPC **248/284.1**; 248/160; 248/282.1; 248/921

(58) **Field of Classification Search**
USPC 248/276.1, 282.1, 284.1, 286.1, 918, 248/921, 922, 160
See application file for complete search history.

(56) **References Cited**

U.S. PATENT DOCUMENTS

241,925	A	5/1881	Cadwell
419,521	A	1/1890	Heald et al.
818,982	A	4/1906	Skelley
892,612	A	7/1908	O'Neill
895,834	A	8/1908	Aungst
1,063,220	A	6/1913	Seamon
1,252,207	A	1/1918	Walker
1,328,677	A	1/1920	Hodnv
1,682,180	A	8/1928	Merrill
1,733,107	A	10/1929	Ahlberg
1,797,847	A	3/1931	Vandagriff
1,826,162	A	10/1931	Balk
2,248,410	A	7/1941	Moeller
2,287,577	A	6/1942	Stava
2,326,558	A	8/1943	Pelz
2,588,009	A	3/1952	Jones
2,615,664	A	10/1952	Reeves

(Continued)

FOREIGN PATENT DOCUMENTS

CH	674670	A5	6/1990
DE	2002017	A	7/1971

(Continued)

OTHER PUBLICATIONS

Ergotron, Inc., "Total Computer Management Solutions: Ergotron Products," Brochure, 6 Pgs., St. Paul, Minnesota.

(Continued)

Primary Examiner — Gwendolyn W Baxter
(74) *Attorney, Agent, or Firm* — Quarles & Brady LLP

(57) **ABSTRACT**

An assembly for supporting a device for movement between several positions, the assembly comprising a first four-bar subassembly including proximate and distal ends and a second four-bar subassembly including proximate and distal ends and first and second link members that pivot about substantially parallel axis, the distal end of the first four-bar subassembly linked to the proximate end of the second four-bar subassembly for rotation about an additional axis that is substantially perpendicular to the parallel axis.
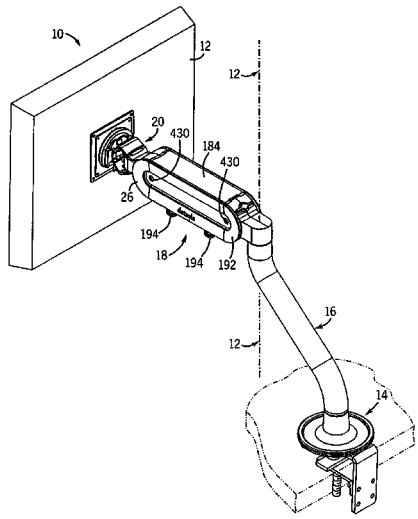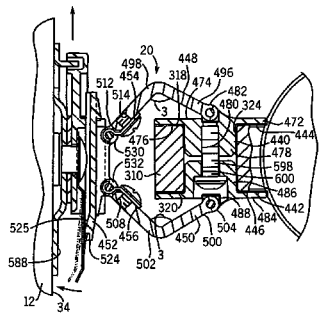
51 Claims, 16 Drawing Sheets