FIG. 3 PRIOR ART

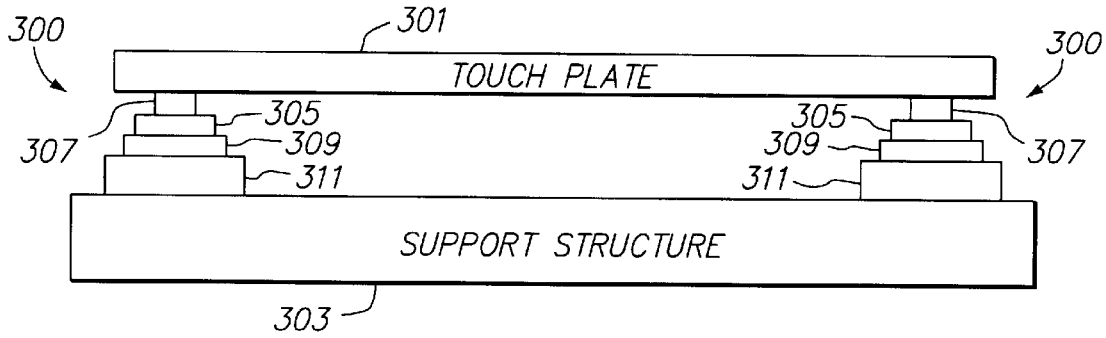

FIG. 4

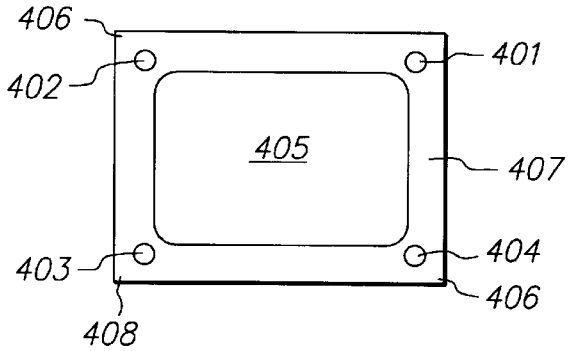

FIG. 5 PRIOR ART

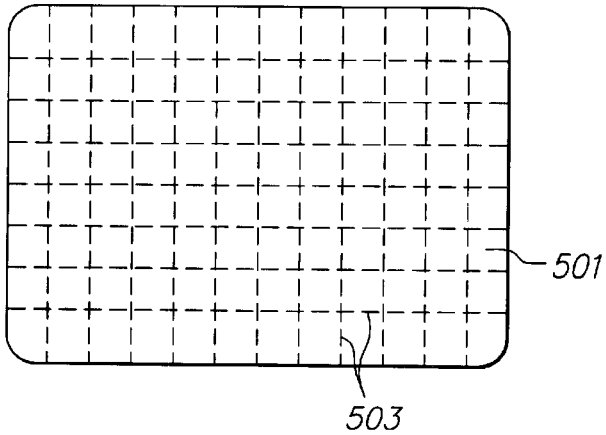
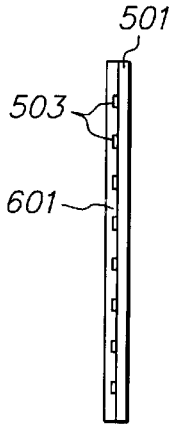
FIG. 6 PRIOR ART