US007874679B2

(12) **United States Patent**
**Stonier**

(10) **Patent No.: US 7,874,679 B2**
(45) **Date of Patent: Jan. 25, 2011**

(54) **IMAGING APPARATUS**

(75) Inventor: **Christopher Simon Stonier**, Ashley Heath (GB)

(73) Assignee: **Domestic Fire Appliances Limited**, Market Drayton (GB)

( * ) Notice: Subject to any disclaimer, the term of this patent is extended or adjusted under 35 U.S.C. 154(b) by 740 days.

(21) Appl. No.: **11/720,734**

(22) PCT Filed: **Dec. 2, 2005**

(86) PCT No.: **PCT/GB2005/004610**

§ 371 (c)(1),
(2), (4) Date: **Nov. 15, 2007**

(87) PCT Pub. No.: **WO2006/059116**

PCT Pub. Date: **Jun. 8, 2006**

(65) **Prior Publication Data**

US 2008/0252969 A1 Oct. 16, 2008

(30) **Foreign Application Priority Data**

Dec. 3, 2004 (GB) ..... 0426502.1

(51) **Int. Cl.**
***G03B 21/14*** (2006.01)

(52) **U.S. Cl.** ..... **353/10**; 353/74; 359/478

(58) **Field of Classification Search** ..... 353/74, 353/77, 78, 79, 98, 99, 10, 28; 359/478, 359/457, 458

See application file for complete search history.

(56) **References Cited**

U.S. PATENT DOCUMENTS

| | | | | |
|---|---|---|---|---|
| 6,233,024 | B1 * | 5/2001 | Hiller et al. | 348/744 |
| 6,364,490 | B1 * | 4/2002 | Krause | 353/77 |
| 6,926,412 | B2 * | 8/2005 | Kim et al. | 353/94 |
| 6,994,437 | B2 * | 2/2006 | Suzuki et al. | 353/77 |
| 7,562,983 | B2 * | 7/2009 | Kim et al. | 353/10 |
| 2004/0252284 | A1 * | 12/2004 | Suzuki et al. | 353/77 |

FOREIGN PATENT DOCUMENTS

| | | |
|---|---|---|
| EP | 0999464 | 5/2000 |
| GB | 1266131 | 3/1972 |
| GB | 2222000 A | 2/1990 |
| GB | 2264555 A | 9/1993 |
| GB | 2288052 | 10/1995 |
| GB | 2350670 | 12/2000 |
| GB | 2391614 | 2/2004 |
| JP | 2002123206 | 4/2002 |

* cited by examiner

*Primary Examiner*—William C Dowling
(74) *Attorney, Agent, or Firm*—Chernoff, Vilhauer, McClung & Stenzel

(57) **ABSTRACT**

Imaging apparatus including image creation means for creating a moving image, means for enlarging the image, and a screen on which the image is displayed in use to a viewer. The image creation means includes a substantially planar image creation screen on which the image is created.
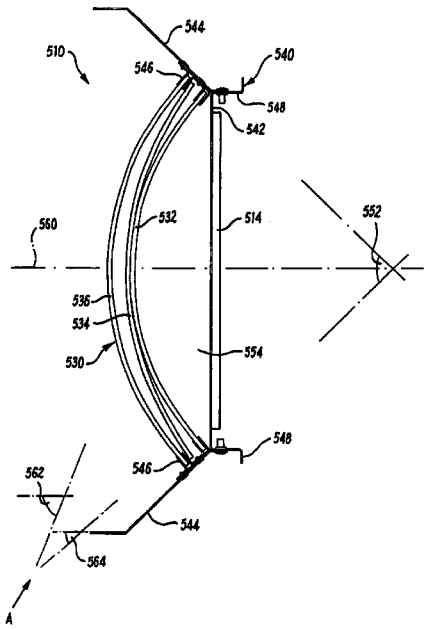
**5 Claims, 5 Drawing Sheets**