# United States Patent [19]

**Deeg et al.**

[11] **4,073,579**

[45] **Feb. 14, 1978**


[54] **OPHTHALMIC LENS WITH LOCALLY VARIABLE INDEX OF REFRACTION AND METHOD OF MAKING SAME**


[75] Inventors: **Emil W. Deeg**, Woodstock, Conn.; **David A. Krohn**, Southbridge, Mass.

[73] Assignee: **American Optical Corporation**, Southbridge, Mass.



[21] Appl. No.: **694,428**

[22] Filed: **June 9, 1976**

[51] **Int. Cl.**[2] ..... **G02B 27/10**; C03C 15/00; C03C 17/00; C03C 19/00

[52] **U.S. Cl.** ..... **351/169**; 65/30 E; 65/30 R; 65/31; 65/37; 65/38; 65/60 D; 65/60 R; 65/61

[58] **Field of Search** ..... 65/31, 17, 30 E, 30 R, 65/61, 37, 38, 60 D, 60 R; 351/169



[56] **References Cited**

U.S. PATENT DOCUMENTS

| | | | |
|---|---|---|---|
| 901,659 | 10/1908 | Stevens | 65/37 |
| 1,483,509 | 2/1924 | Bugbee | 65/18 X |
| 1,630,724 | 5/1927 | Tillyer | 65/37 |
| 1,865,691 | 7/1932 | Hill | 65/37 |
| 2,336,227 | 12/1943 | Dalton | 65/31 |
| 2,355,746 | 8/1944 | Nurdberg et al. | 65/31 |
| 3,486,808 | 12/1969 | Hamblen | 65/30 E |
| 3,542,535 | 11/1970 | Hensler et al. | 65/37 X |
| 3,650,598 | 3/1972 | Kitayo et al. | 65/31 X |
| 3,802,761 | 4/1974 | Giallorenzi et al. | 65/30 E |
| 3,857,689 | 12/1974 | Kolzumi et al. | 65/30 E |
| 3,938,974 | 2/1976 | Macedo et al. | 65/31 X |

FOREIGN PATENT DOCUMENTS

| | | | |
|---|---|---|---|
| 189,988 | 3/1965 | U.S.S.R. | 65/31 |



*Primary Examiner*—S. Leon Bashore
*Assistant Examiner*—Frank W. Miga
*Attorney, Agent, or Firm*—Howard R. Berkenstock



[57] **ABSTRACT**

Ophthalmic lenses with locally variable indices of refraction produced from microporous glass bodies diffused with inorganic salts and rendered transparent by heat treatment. Local variations in refractive index result from differences in concentrations of the salts produced by controlled diffusion and/or selective leaching after impregnation of the porous bodies.

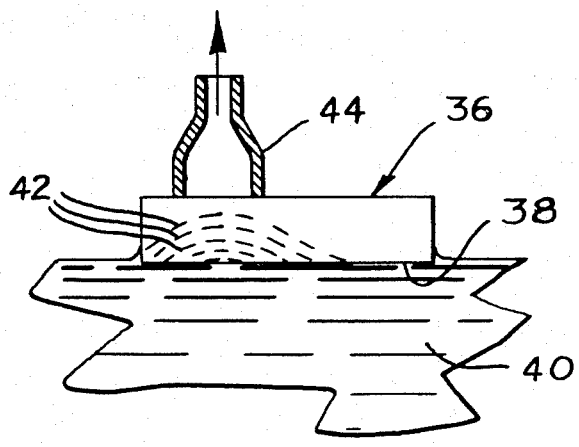
**8 Claims, 11 Drawing Figures**