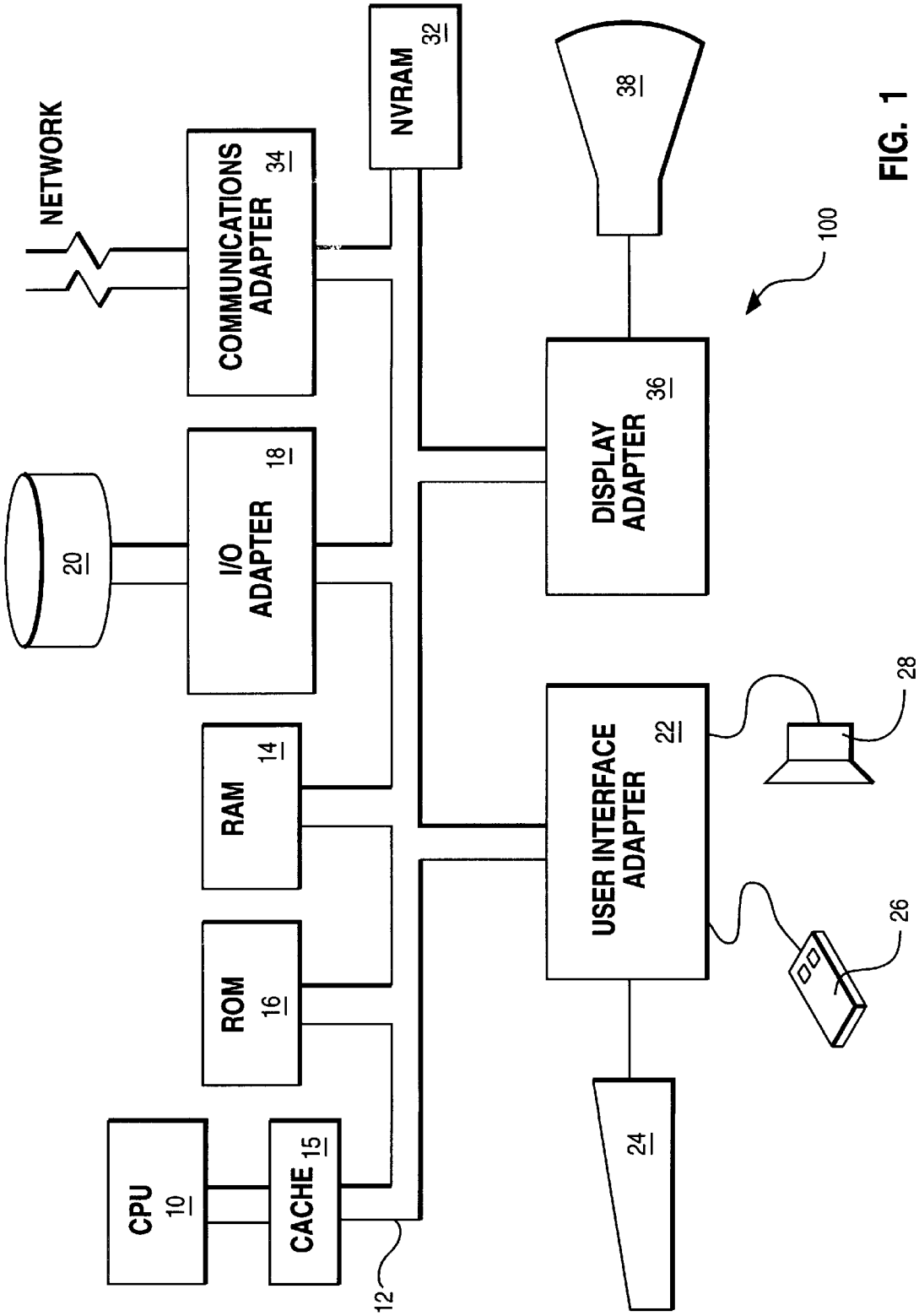
NETWORK
COMMUNICATIONS ADAPTER 34
NVRAM 32
38
100
I/O ADAPTER 18
20
DISPLAY ADAPTER 36
RAM 14
ROM 16
USER INTERFACE ADAPTER 22
28
26
CPU 10
CACHE 15
12
24

FIG. 1