ARTICLE OF LUGGAGE

Filed March 17, 1965 3 Sheets-Sheet 1

FIG. 1

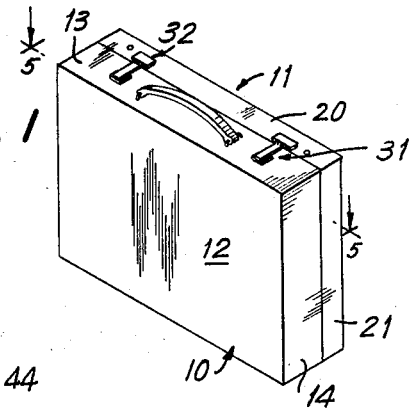

FIG. 2

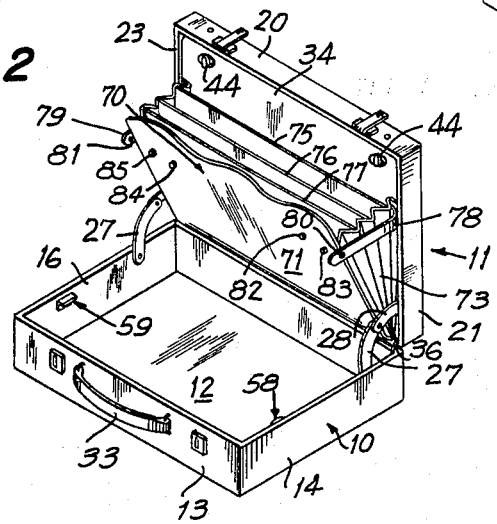

FIG. 3

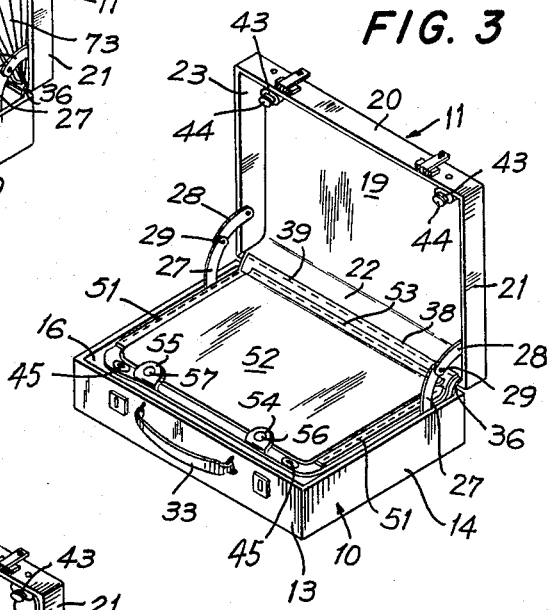

FIG. 4

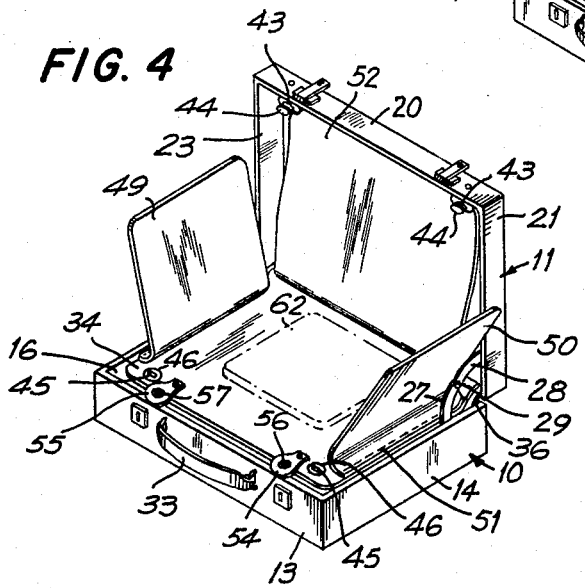

INVENTOR
JOSEPH BIALER
BY Edward F. Levy
ATTORNEY