FIG. 1

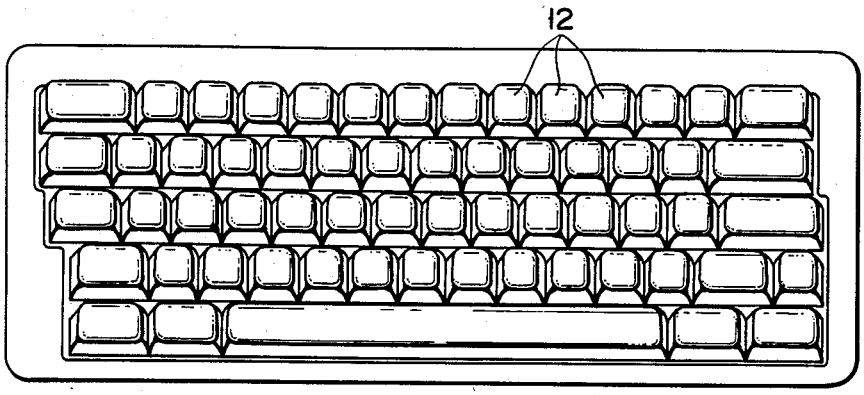
12

FIG. 2

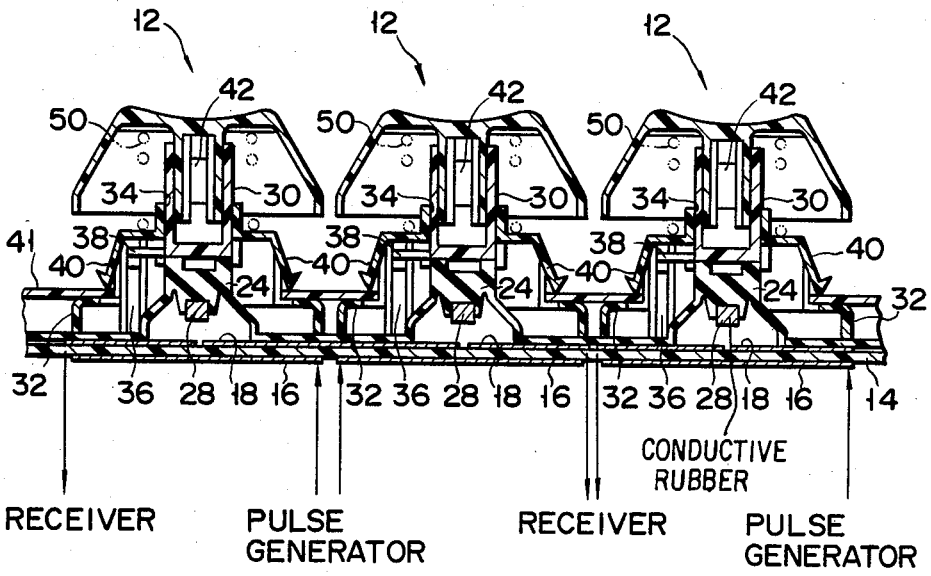
12
12
12
42
42
42
50
50
50
34
30
34
30
34
30
41
38
38
38
40
40
40
40
24
24
24
32
32
36
28
18
16
32
36
28
18
16
32
36
28
18
16
14
CONDUCTIVE RUBBER
RECEIVER
PULSE GENERATOR
RECEIVER
PULSE GENERATOR