METERING PUMP

Filed Aug. 8, 1968

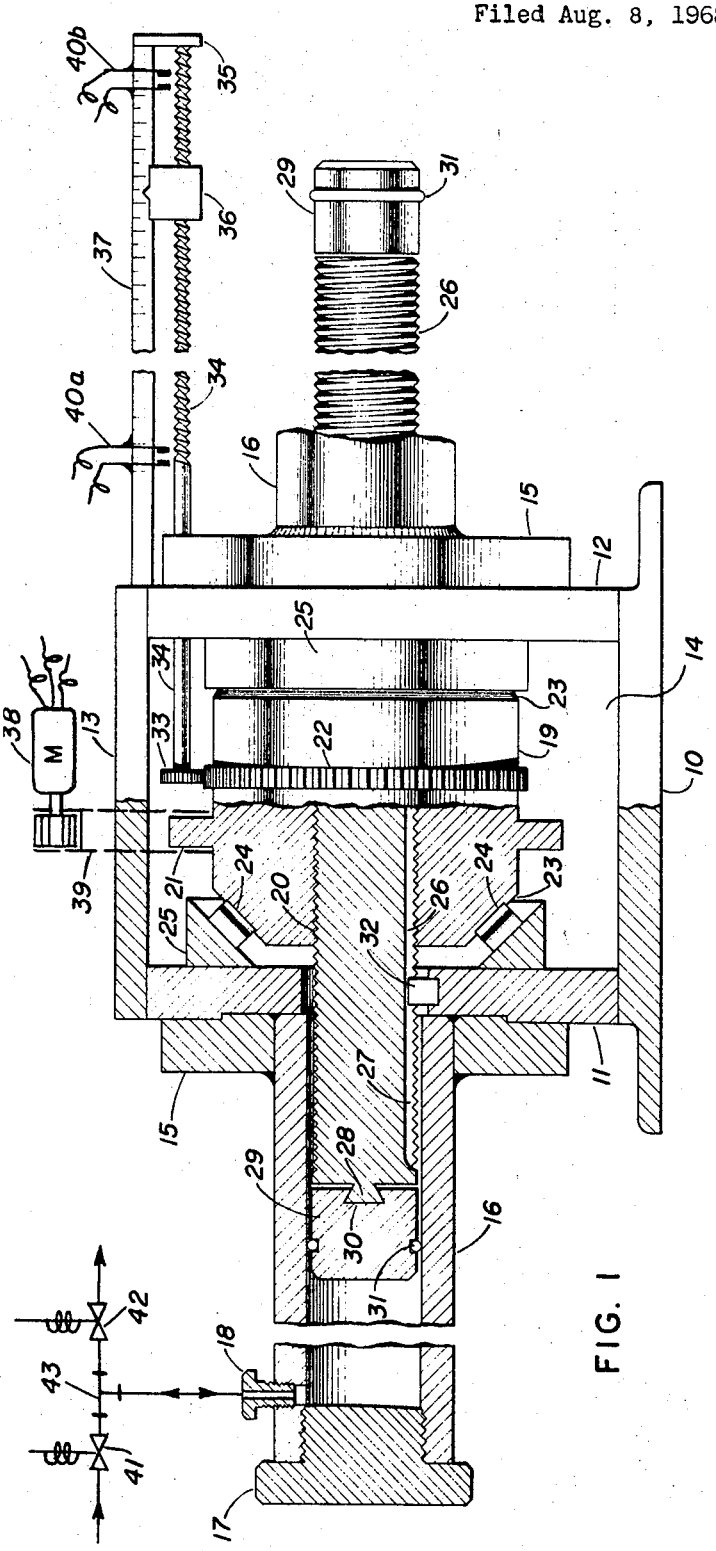

FIG. 1

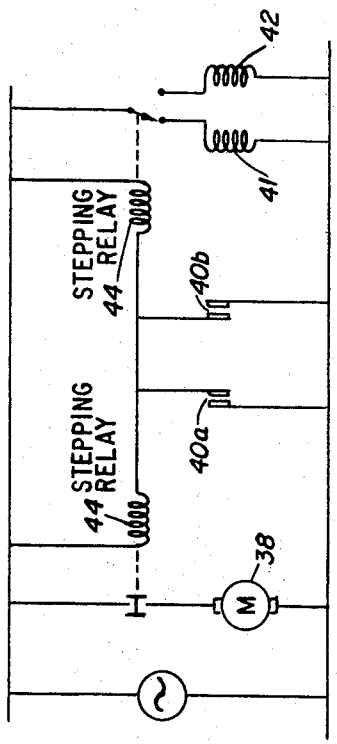

FIG. 2

INVENTOR.
PAUL L. MIDDLEBUSHER
WILLIAM R. BUCK
BY
William A. Mikesell Jr.
ATTORNEY