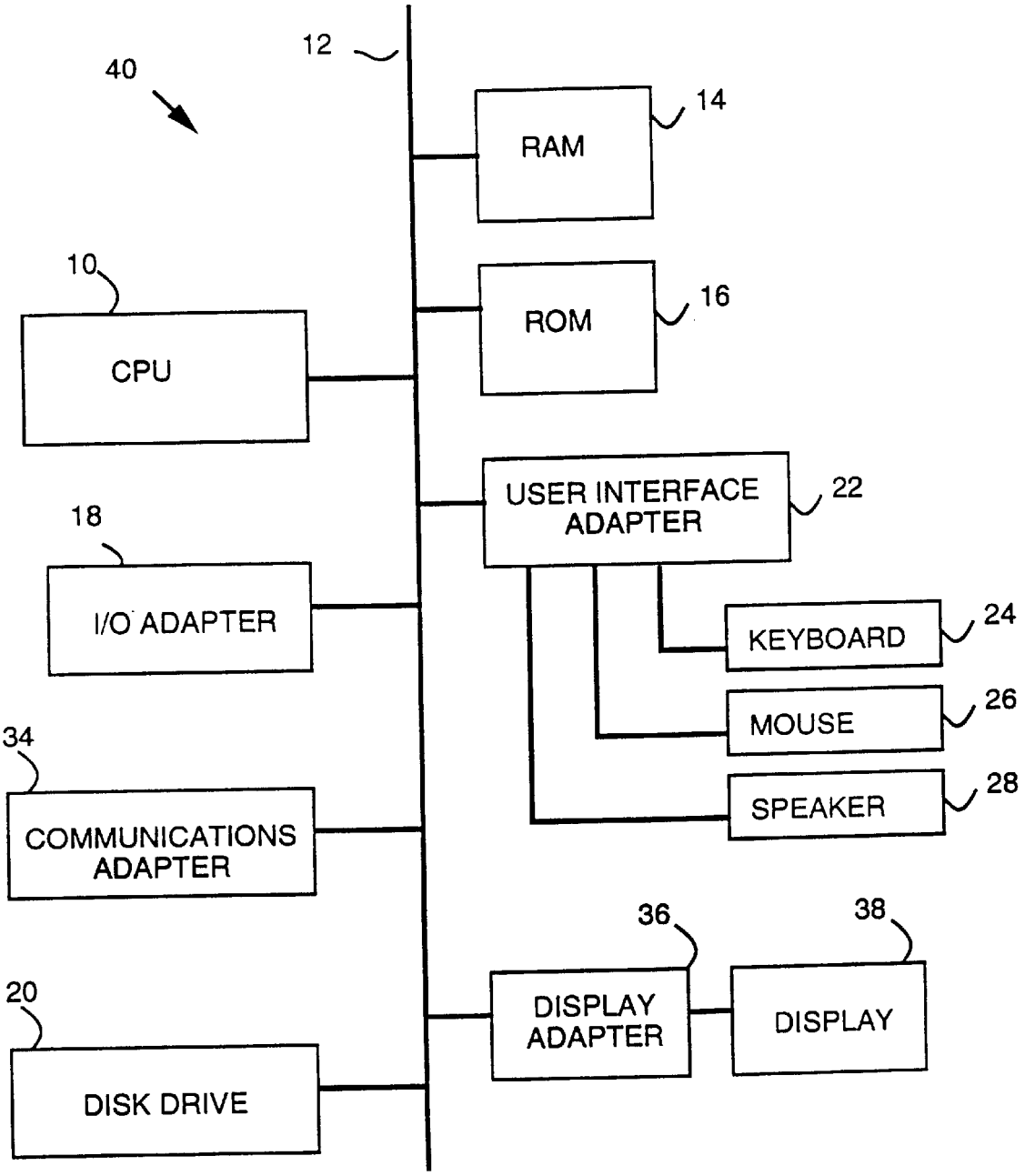
40
12
RAM
14
10
CPU
ROM
16
USER INTERFACE ADAPTER
22
18
I/O ADAPTER
KEYBOARD
24
MOUSE
26
34
COMMUNICATIONS ADAPTER
SPEAKER
28
36
38
20
DISPLAY ADAPTER
DISPLAY
DISK DRIVE

FIG. 1