US008246679B2

(12) **United States Patent**
Nguyen et al.

(10) **Patent No.: US 8,246,679 B2**
(45) **Date of Patent: Aug. 21, 2012**

(54) **INTRAOCULAR LENS**

(75) Inventors: **Tuan Anh Nguyen**, Orange, CA (US); **Gholam-Reza Zadno-Azizi**, Fremont, CA (US); **Scott Evans**, Santa Ana, CA (US)

(73) Assignee: **Visiogen, Inc.**, Santa Ana, CA (US)

(*) Notice: Subject to any disclaimer, the term of this patent is extended or adjusted under 35 U.S.C. 154(b) by 0 days.

(21) Appl. No.: **12/861,732**

(22) Filed: **Aug. 23, 2010**

(65) **Prior Publication Data**

US 2010/0324673 A1 Dec. 23, 2010

Related U.S. Application Data

(63) Continuation of application No. 10/958,871, filed on Oct. 5, 2004, now Pat. No. 7,780,729.

(60) Provisional application No. 60/563,238, filed on Apr. 16, 2004.

(51) **Int. Cl.**
A61F 2/16 (2006.01)

(52) **U.S. Cl.** **623/6.37**; 623/6.15; 623/6.32; 623/6.39; 623/6.43

(58) **Field of Classification Search** ..... None
See application file for complete search history.

(56) **References Cited**

U.S. PATENT DOCUMENTS

1,483,509	A	2/1924	Bugbee
2,129,305	A	9/1938	Feinbloom
2,274,142	A	2/1942	Houchin
2,405,989	A	8/1946	Beach
2,511,517	A	6/1950	Spiegel
3,031,927	A	5/1962	Wesley
3,034,403	A	5/1962	Neefe
RE25,286	E	11/1962	de Carle
3,210,894	A	10/1965	Bentley et al.
3,222,432	A	12/1965	Grandperret
3,227,507	A	1/1966	Feinbloom
3,339,997	A	9/1967	Wesley
3,420,006	A	1/1969	Barnett
3,431,327	A	3/1969	Tsuetaki

(Continued)

FOREIGN PATENT DOCUMENTS

AU 3225789 10/1989

(Continued)

OTHER PUBLICATIONS

ASCRS Symposium of Cataracts IOL and Refractive Surgery. ASOA Congress on Ophthalmic Practice Management. Clinical & Surgical Staff Program. Partial Program re: ASCRS Symposium, Showing Video Tape Shown between Apr. 10-14, 1999.

(Continued)

Primary Examiner — David H Willse
Assistant Examiner — Javier Blanco
(74) *Attorney, Agent, or Firm* — Knobbe Martens Olson & Bear LLP

(57) **ABSTRACT**

An accommodating intraocular lens has an anterior portion including an anterior viewing element and an anterior biasing element connected to the anterior viewing element. A posterior portion has a posterior viewing element and a posterior biasing element connected to the posterior viewing element. The anterior and posterior biasing elements are connected at first and second apices. First and second distending members are connected to the posterior portion. The first and second distending members extend to locations significantly anterior of an anterior side of the posterior viewing element.
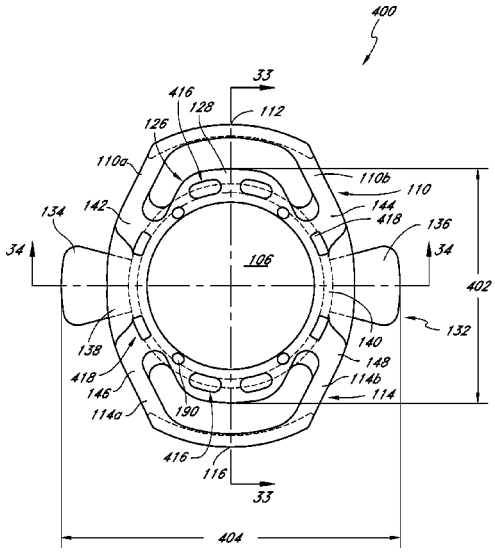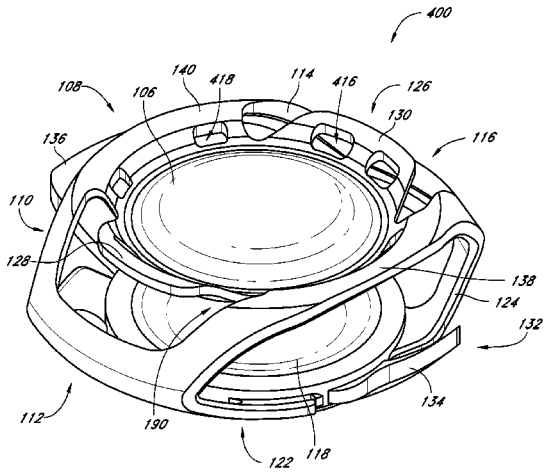
11 Claims, 35 Drawing Sheets