US006443179B1

(12) **United States Patent**
Benavides et al.

(10) **Patent No.: US 6,443,179 B1**
(45) **Date of Patent: Sep. 3, 2002**

(54) **PACKAGING OF ELECTRO-MICROFLUIDIC DEVICES**

(75) Inventors: **Gilbert L. Benavides**, Albuquerque, NM (US); **Paul C. Galambos**, Albuquerque, NM (US); **John A. Emerson**, Albuquerque, NM (US); **Kenneth A. Peterson**, Albuquerque, NM (US); **Rachel K. Giunta**, Albuquerque, NM (US); **Robert D. Watson**, Tijeras, NM (US)

(73) Assignee: **Sandia Corporation**, Albuquerque, NM (US)

(*) Notice: Subject to any disclaimer, the term of this patent is extended or adjusted under 35 U.S.C. 154(b) by 0 days.

(21) Appl. No.: **09/790,423**

(22) Filed: **Feb. 21, 2001**

(51) **Int. Cl.**[7] **F16K 27/00**
(52) **U.S. Cl.** **137/454.2**; 137/597; 285/120.1
(58) **Field of Search** 137/594, 597, 137/606, 607, 454.2, 454.6, 833; 285/120.1, 122.1, 124.3

(56) **References Cited**

U.S. PATENT DOCUMENTS

3,654,947 A * 4/1972 Hatch et al. 137/833
5,640,995 A 6/1997 Packard et al. 137/597
5,964,239 A 10/1999 Loux et al. 137/15
6,102,068 A * 8/2000 Higdon et al. 137/269
6,136,212 A 10/2000 Mastrangelo et al. 216/49

OTHER PUBLICATIONS

Co–pending US patent application "Packaging of Electro-Microfluidic Devices", G. Benavides, et al, commonly assigned to Sandia Corporation, Albuquerque, New Mexico, Docket No. SD–6816.

T. Merkel, M. Graeber and L. Pagel, "A new technology for fluidic microsystems based on PCB technology", Sensors and Actuators 77 (1999) pp. 98–105.

(List continued on next page.)

Primary Examiner—Stephen M. Hepperle
(74) *Attorney, Agent, or Firm*—Robert D. Watson

(57) **ABSTRACT**

A new architecture for packaging surface micromachined electro-microfluidic devices is presented. This architecture relies on two scales of packaging to bring fluid to the device scale (picoliters) from the macro-scale (microliters). The architecture emulates and utilizes electronics packaging technology. The larger package consists of a circuit board with embedded fluidic channels and standard fluidic connectors (e.g. Fluidic Printed Wiring Board). The embedded channels connect to the smaller package, an Electro-Microfluidic Dual-Inline-Package (EMDIP) that takes fluid to the microfluidic integrated circuit (MIC). The fluidic connection is made to the back of the MIC through Bosch-etched holes that take fluid to surface micromachined channels on the front of the MIC. Electrical connection is made to bond pads on the front of the MIC.
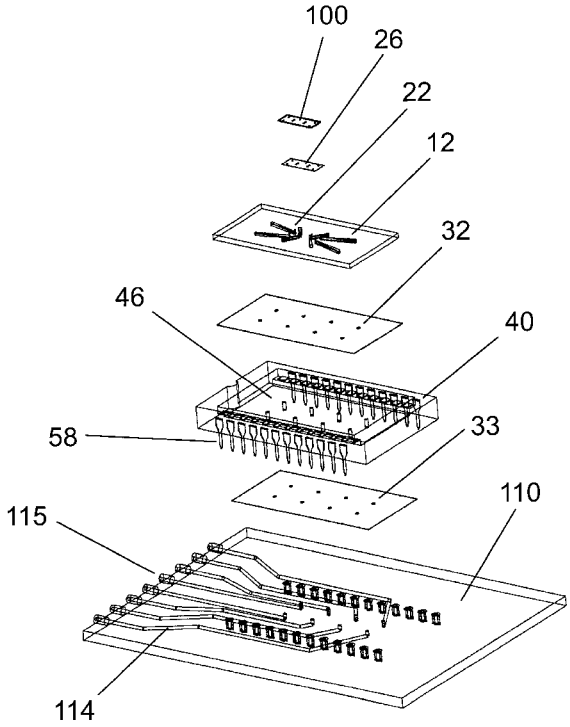
78 Claims, 33 Drawing Sheets