US009636279B2

(12) **United States Patent**
**Song et al.**

(10) **Patent No.: US 9,636,279 B2**
(45) **Date of Patent: May 2, 2017**

(54) **LOCKED PILL BOTTLE WITH TIMED DISPENSE LIMITS**

(71) Applicants: **Michael Song**, Old Tappan, NJ (US); **Rebecca Song**, Old Tappan, NJ (US)

(72) Inventors: **Michael Song**, Old Tappan, NJ (US); **Rebecca Song**, Old Tappan, NJ (US)

( * ) Notice: Subject to any disclaimer, the term of this patent is extended or adjusted under 35 U.S.C. 154(b) by 0 days.

(21) Appl. No.: **14/860,807**

(22) Filed: **Sep. 22, 2015**

(65) **Prior Publication Data**

US 2017/0079887 A1 Mar. 23, 2017

(51) **Int. Cl.**

| | |
|---|---|
| ***B65G 59/00*** | (2006.01) |
| ***B65H 3/44*** | (2006.01) |
| ***G04B 37/00*** | (2006.01) |
| ***A47F 3/00*** | (2006.01) |
| ***B65D 83/00*** | (2006.01) |
| ***A61J 7/04*** | (2006.01) |
| ***A61J 1/03*** | (2006.01) |
| ***B65D 83/04*** | (2006.01) |

(52) **U.S. Cl.**

CPC ..... ***A61J 7/0427*** (2015.05); ***A61J 1/03*** (2013.01); ***B65D 83/0409*** (2013.01)

(58) **Field of Classification Search**

CPC ..... B65G 59/00; B65H 3/44; B65E 59/00; G04B 37/00; A47F 3/00

USPC ..... 340/5.28; 221/93, 103, 264, 268

See application file for complete search history.

(56) **References Cited**

U.S. PATENT DOCUMENTS

| | | | | |
|---|---|---|---|---|
| 3,638,830 | A * | 2/1972 | Belokin, Jr. | B65D 83/0409 206/533 |
| 3,730,388 | A * | 5/1973 | Bender | A61J 7/02 141/94 |
| 4,117,956 | A * | 10/1978 | von Schuckmann | B65D 83/0427 221/288 |
| 4,127,190 | A * | 11/1978 | Sunnen | A61J 7/04 116/216 |
| 4,230,236 | A * | 10/1980 | Boulter | B65D 83/0409 221/190 |
| 4,405,060 | A * | 9/1983 | Hsei | B65D 83/0409 221/135 |
| 4,415,098 | A * | 11/1983 | Haas | B65D 83/0409 221/202 |
| 4,457,451 | A * | 7/1984 | Ichikawa | B65G 47/1407 221/190 |
| 4,519,515 | A | 5/1985 | Schonberger | |
| 4,573,606 | A * | 3/1986 | Lewis | A61J 7/0481 221/15 |

(Continued)

*Primary Examiner* — Nam V Nguyen

(74) *Attorney, Agent, or Firm* — Michael J. Feigin, Esq.; Feigin & Fridman LLC

(57) **ABSTRACT**

The disclosed pill bottle allows for timed dispensing of medicine, as programmed by a physician, pharmacist, or caregiver. The device has a slot for pill entry in any one of the walls, the slot being sealable and lockable. In an unlocked and open condition, the slot is a portal from the outside of the bottle into an inner cavity, the cavity being adapted for pill storage and extending between the slot/opening for pill entry and an exit tube. The exit tube is sized for single-file passage of a plurality of pills. A button or blocking device (defined as a mechanical and/or physical object which prevents movement of a pill out of the device) is movable only at pre-programmed intervals of time, allowing the exit of a pill or dosage of pills.
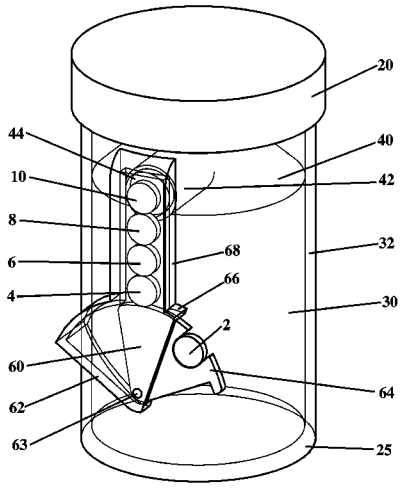
**18 Claims, 12 Drawing Sheets**