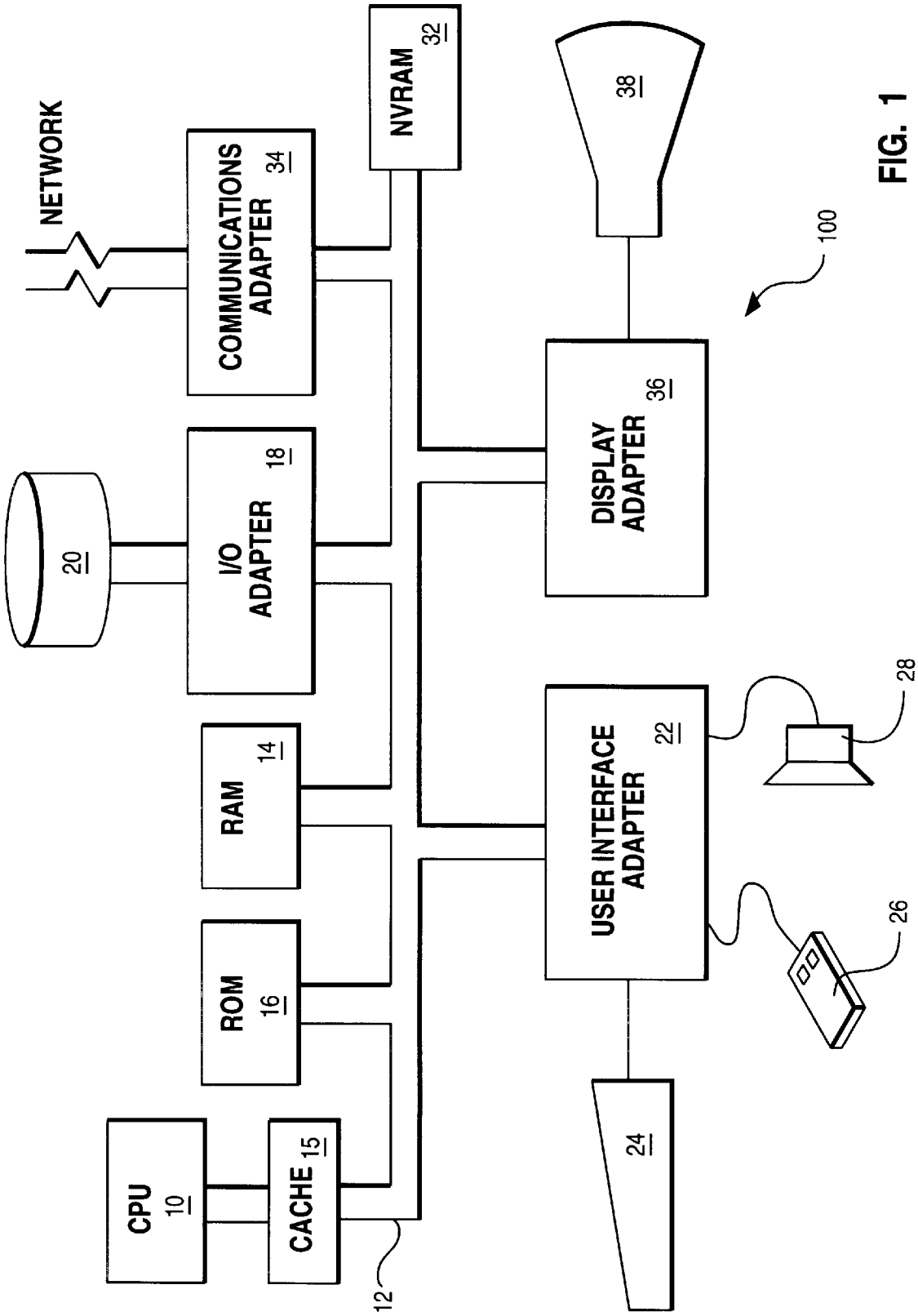
NETWORK
COMMUNICATIONS ADAPTER 34
NVRAM 32
38
100
DISPLAY ADAPTER 36
20
I/O ADAPTER 18
RAM 14
ROM 16
USER INTERFACE ADAPTER 22
28
26
24
CPU 10
CACHE 15
12

FIG. 1