US005514379A

United States Patent [19]

Weissleder et al.

[11] **Patent Number: 5,514,379**

[45] **Date of Patent: May 7, 1996**

[54] **HYDROGEL COMPOSITIONS AND METHODS OF USE**

[75] Inventors: **Ralph Weissleder**, Charlestown; **Alexei Bogdanov**, Newton, both of Mass.

[73] Assignee: **The General Hospital Corporation**, Boston, Mass.

[21] Appl. No.: **927,068**

[22] Filed: **Aug. 7, 1992**

[51] **Int. Cl.**[6] **A61K 9/10**; A61K 49/00; A61K 49/04

[52] **U.S. Cl.** **424/426**; 424/486; 424/488; 424/484; 252/315.1; 252/315.3; 514/944

[58] **Field of Search** 424/426, 484, 424/2, 4, 5; 252/315.1; 525/55.1, 937; 530/810, 816, 817, 402; 514/944, 773–776

[56] **References Cited**

U.S. PATENT DOCUMENTS

4,113,785	9/1978	Helfert et al.	260/615 B
4,124,705	11/1978	Rothman et al.	424/180
4,126,669	11/1978	Rothman et al.	424/1
4,684,558	8/1987	Keusch et al.	428/40
4,814,098	3/1989	Inada et al.	252/62.51
4,865,846	9/1989	Kaufman	424/428
4,976,703	12/1990	Franetzki et al.	604/247
4,986,980	1/1991	Jacobsen	424/9
5,008,109	4/1991	Tin	514/944
5,032,391	7/1991	Helioff et al.	514/944
5,041,292	8/1991	Feijen	424/484
5,208,324	5/1993	Klaveness et al.	536/17.1

FOREIGN PATENT DOCUMENTS

0046136	2/1982	European Pat. Off. .
0260098	3/1988	European Pat. Off. .
WO89/11874	12/1989	WIPO .
WO91/15753	10/1991	WIPO .

OTHER PUBLICATIONS

Bischoff et al., *Urol. Int.*, 32:323–335 (1977).
Bligh et al., *Magn. Reson. Med.*, 17:516–532 (1991).
Chazov et al., *Thromb. Res.*, 12:809–816 (1978).
Durand et al., Chapter 21 of Selected papers from Networks '88, 9th Polymer Network Group Meeting, Freiburg, West Germany, 26–30 Sep. 1988 pp. 283–301, W. Burchard and S. B. Ross–Murphy editors.
Krejcarek et al., *Biochem. Biophys. Res. Comm.*, 77:581–586 (1977).
Fujimoto et al., *Cancer*, 56:2404–2410 (1985).
Hnatowich et al., *J. Immunol. Meth.*, 65:147–157 (1983).
Jayakrishnan et al. *J. Biomed. Mat. Res.*, 25:993–1004 (1990).
Kennedy et al., *Am. Surg.*, 33:763–771 (1967).
Larsen et al., *J. Biomed. Mater. Res.*, 25:699–710 (1991).
Link et al., *Acta Radiol.*, 6:727–729 (1988).
Mitsuhashi et al., *Am. J. Path.*, 124:246–52 (1986).
Rao et al., *J. Neuroradiol.*, 18:61–69 (1991).
Shelub et al., *J. Appl. Physiol.*, 56:810–15 (1984).
Szmigielski et al., *Pol. Przeg. Rad.*, 47:387–90 (1983).
Torchilin et al., *J. Biomed. Mater. Res.*, 11:223–234 (1977).
Torchilin et al., *J. Biom. Mater. Res.*, 19:461–466 (1985).
Verdon et al., *Scan. Micro.*, 4:341–350 (1990).
Weyne et al., *Stroke*, 18:128–37 (1987).
Winding, O., *Neuroradiol.*, 21:123–126 (1981).
Wright et al., *Radiology*, 142:351–54 (1982).
Gore et al., *Magn. Reson. Med.*, 9:325–332 (1989).

Primary Examiner—Edward J. Webman
Attorney, Agent, or Firm—Fish & Richardson

[57] **ABSTRACT**

Biocompatible, biodegradable, hydrogels are prepared from a backbone bonded to a cross-linking agent. Suitable backbones include proteins and polysaccharides, e.g,, albumin, polymannuronic acid, or polygalacturonic acid. Suitable cross-linking agents include polyvalent derivatives of polyethylene or polyalkylene glycol. These hydrogel compositions may be loaded with diagnostic labels, e.g,, radiopaque, paramagnetic, or superparamagnetic materials, or therapeutic drugs, e.g., chemotherapeutic drugs, antibiotics, or cells that produce therapeutic agents. This invention also relates to methods of use of such hydrogels for imaging during interventional procedures of a patient.
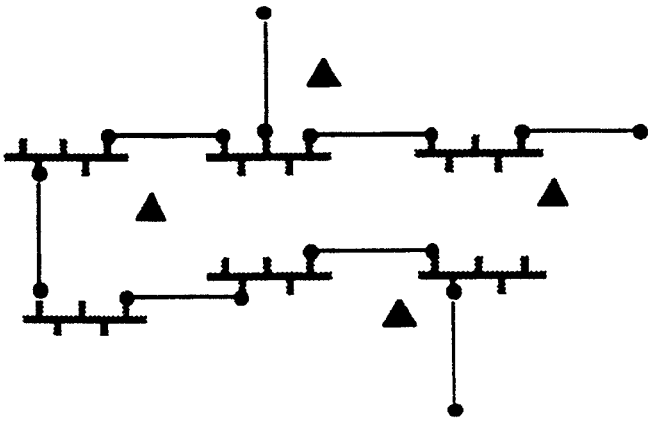
17 Claims, 6 Drawing Sheets