US009411179B2

(12) **United States Patent**
Kim

(10) **Patent No.: US 9,411,179 B2**
(45) **Date of Patent: Aug. 9, 2016**

(54) **ASSEMBLY APPARATUS FOR A DISPLAY DEVICE**

(71) Applicant: **Samsung Display Co., LTD.**, Yongin, Gyeonggi-Do (KR)

(72) Inventor: **Hong-Am Kim**, Yongin (KR)

(73) Assignee: **Samsung Display Co., Ltd.**, Samsung-ro, Giheung-Gu, Yongin-si, Gyeonggi-Do (KR)

(*) Notice: Subject to any disclaimer, the term of this patent is extended or adjusted under 35 U.S.C. 154(b) by 73 days.

(21) Appl. No.: **13/972,310**

(22) Filed: **Aug. 21, 2013**

(65) **Prior Publication Data**

US 2014/0311679 A1 Oct. 23, 2014

(30) **Foreign Application Priority Data**

Apr. 22, 2013 (KR) 10-2013-0044253

(51) **Int. Cl.**

H05K 3/00	(2006.01)
G02F 1/13	(2006.01)
B65C 9/18	(2006.01)
B65C 1/02	(2006.01)
H05K 1/18	(2006.01)
G02F 1/1333	(2006.01)

(52) **U.S. Cl.**

CPC ***G02F 1/1303*** (2013.01); *B65C 1/021* (2013.01); *B65C 9/1884* (2013.01); *G02F 2001/133325* (2013.01); *G02F 2202/28* (2013.01); *H05K 1/189* (2013.01); *H05K 2201/10128* (2013.01); *Y10T 156/17* (2015.01)

(58) **Field of Classification Search**

CPC B65C 9/1884; B65C 1/021; Y10T 156/17; G02F 1/1303

USPC 156/521, 542, 556

See application file for complete search history.

(56) **References Cited**

U.S. PATENT DOCUMENTS

6,318,436	B1 *	11/2001	Hummell et al.	156/556
2006/0185796	A1 *	8/2006	Hayasaka et al.	156/556

FOREIGN PATENT DOCUMENTS

JP	2010056141	3/2010
KR	1020060129644	12/2006
KR	101151827	6/2012

* cited by examiner

Primary Examiner — Philip Tucker
Assistant Examiner — John Blades
(74) *Attorney, Agent, or Firm* — Robert E. Bushnell, Esq.

(57) **ABSTRACT**

An assembly apparatus for a display device includes a panel support member for supporting a display panel; a tape attaching module for attaching a cover panel tape to the display panel; and a pocket member holding a connector of a flexible printed circuit board attached to the cover panel tape.
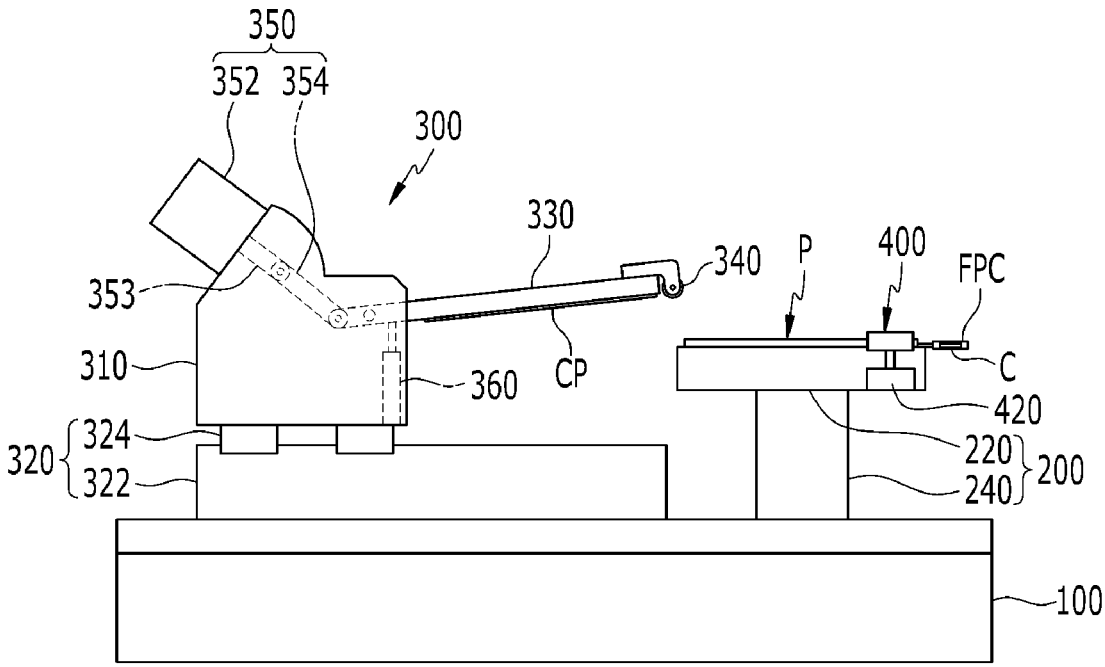
14 Claims, 8 Drawing Sheets