US009410979B2

(12) **United States Patent**
Yuen et al.

(10) **Patent No.: US 9,410,979 B2**
(45) **Date of Patent: Aug. 9, 2016**

(54) **HYBRID ANGULAR MOTION SENSORS**

(71) Applicant: **Fitbit, Inc.**, San Francisco, CA (US)

(72) Inventors: **Shelten Gee Jao Yuen**, Berkeley, CA (US); **Jung Ook Hong**, Emeryville, CA (US)

(73) Assignee: **Fitbit, Inc.**, San Francisco, CA (US)

(*) Notice: Subject to any disclaimer, the term of this patent is extended or adjusted under 35 U.S.C. 154(b) by 0 days.

(21) Appl. No.: **14/861,920**

(22) Filed: **Sep. 22, 2015**

(65) **Prior Publication Data**

US 2016/0084869 A1 Mar. 24, 2016

Related U.S. Application Data

(60) Provisional application No. 62/068,497, filed on Oct. 24, 2014, provisional application No. 62/054,341, filed on Sep. 23, 2014.

(51) **Int. Cl.**
G01P 3/44 (2006.01)
G01P 7/00 (2006.01)

(52) **U.S. Cl.**
CPC ***G01P 7/00*** (2013.01); ***G01P 3/44*** (2013.01)

(58) **Field of Classification Search**
CPC G01P 7/00; G01P 3/44
See application file for complete search history.

(56) **References Cited**

U.S. PATENT DOCUMENTS

4,526,036	A	7/1985	Morrison	
5,612,931	A	3/1997	Sato et al.	
6,418,797	B1	7/2002	Ambrosina et al.	
6,583,369	B2	6/2003	Montagnino et al.	
9,079,060	B2	7/2015	Hong et al.	
9,168,419	B2	10/2015	Hong et al.	
2010/0263468	A1	10/2010	Fisher et al.	
2010/0331145	A1	12/2010	Lakovic et al.	
2011/0032105	A1	2/2011	Hoffman et al.	
2012/0274508	A1	11/2012	Brown et al.	
2012/0330572	A1	12/2012	Longman	
2013/0009013	A1 *	1/2013	Bourakov	B64D 17/00 244/186
2013/0104650	A1	5/2013	Bailey et al.	
2013/0106684	A1	5/2013	Weast et al.	
2013/0234924	A1	9/2013	Janefalkar et al.	

(Continued)

FOREIGN PATENT DOCUMENTS

EP 1 721 237 8/2012

OTHER PUBLICATIONS

US Office Action, dated Mar. 2, 2015, issued in U.S. Appl. No. 14/292,741.

(Continued)

Primary Examiner — Manuel Rivera Vargas
(74) *Attorney, Agent, or Firm* — Weaver Austin Villeneuve & Sampson LLP

(57) **ABSTRACT**

A hybrid angular rate system is provided. In one aspect, the hybrid angular rate system at least includes two different types of angular rate sensors. The hybrid angular rate system may determine when to use the first angular rate sensor and when to use the second angular rate sensor to obtain angular rate measurements indicative of angular motion of the portable sensor device. Further, the hybrid angular rate system may determine one or more angular motion parameters describing angular motion of the portable sensor device using data from the first angular rate sensor, the second angular rate sensor, or the first angular rate sensor and the second angular rate sensor based on the determination.
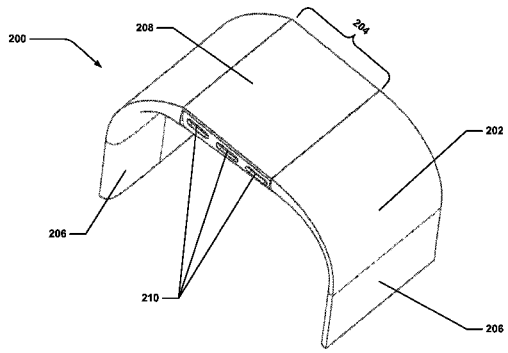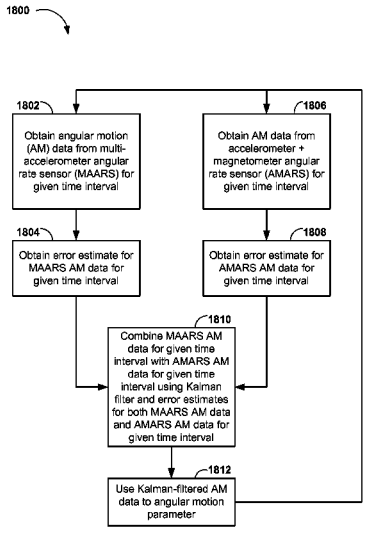
30 Claims, 41 Drawing Sheets