US009410879B1

(12) **United States Patent**
Hose

(10) **Patent No.: US 9,410,879 B1**
(45) **Date of Patent: Aug. 9, 2016**

(54) **HIGH DEFINITION BLOOD TRAILING FLASHLIGHT**

(71) Applicant: **Primos, Inc.**, Flora, MS (US)

(72) Inventor: **Mark D. Hose**, Huntsville, AL (US)

(73) Assignee: **PRIMOS, INC.**, Flora, MS (US)

(*) Notice: Subject to any disclaimer, the term of this patent is extended or adjusted under 35 U.S.C. 154(b) by 84 days.

(21) Appl. No.: **14/262,469**

(22) Filed: **Apr. 25, 2014**

(51) **Int. Cl.**

F21V 9/00	(2015.01)
G01N 21/29	(2006.01)
F21K 99/00	(2016.01)
F21L 4/02	(2006.01)

(52) **U.S. Cl.**
CPC ***G01N 21/29*** (2013.01); ***F21K 9/56*** (2013.01); ***F21L 4/027*** (2013.01); ***F21V 9/00*** (2013.01)

(58) **Field of Classification Search**
CPC F21K 9/56; F21L 4/027; F21V 9/00; F21V 9/083; G01N 21/29
USPC 362/166–170, 293, 311.02
See application file for complete search history.

(56) **References Cited**

U.S. PATENT DOCUMENTS

1,613,203	A	1/1927	Shannon	
1,946,059	A	2/1934	Buchholz	
4,725,460	A	2/1988	Matsuo et al.	
4,804,850	A	2/1989	Norrish et al.	
4,963,798	A	10/1990	McDermott	
5,363,152	A	11/1994	Reed, III	
5,909,062	A *	6/1999	Krietzman	H02J 9/061 307/150
6,250,771	B1	6/2001	Sharrah et al.	
6,290,368	B1	9/2001	Lehrer	
6,334,680	B1	1/2002	Larson	
6,485,160	B1	11/2002	Sommers et al.	
6,862,093	B2	3/2005	Peng et al.	
7,040,780	B2	5/2006	Diehl	
7,066,622	B2	6/2006	Alessio	
7,172,312	B2	2/2007	Chen	
7,290,896	B2	11/2007	Dallas et al.	
7,621,653	B2	11/2009	Hendrie	
7,682,037	B1	3/2010	Hose et al.	
7,699,482	B2	4/2010	Noguchi	
7,988,318	B1	8/2011	Smith et al.	
2003/0227774	A1	12/2003	Martin et al.	
2004/0200980	A1	10/2004	Blackwell et al.	
2004/0223342	A1	11/2004	Klipstein et al.	
2007/0086186	A1	4/2007	Rohlfing et al.	
2007/0195420	A1	8/2007	Fitchmun	
2008/0158875	A1	7/2008	Kim et al.	

OTHER PUBLICATIONS

Coolflashlights.com. "Hunting LED flashlights", archived Feb. 20, 2006, available http://web.archive.org/web/2006022015119/http:///www.coolflashlights.com/hunting_lights.html (3 of 3) Jul. 21, 2008 3:42:12 PM.

Advertisement on Ebay for Winchester Blood Trail Tracking L.E.D. Flashlight; Apr. 18, 2007.

* cited by examiner

Primary Examiner — Jason Moon Han
(74) *Attorney, Agent, or Firm* — Holland & Hart

(57) **ABSTRACT**

A light-emitting device configured to illuminate blood includes a white light source configured to emit white light, and a filter configured to progressively attenuate portions of the white light having wavelengths up to a transition wavelength within a red light spectrum of the white light. The transition wavelength may be in the range of about 610 nm to about 618 nm.
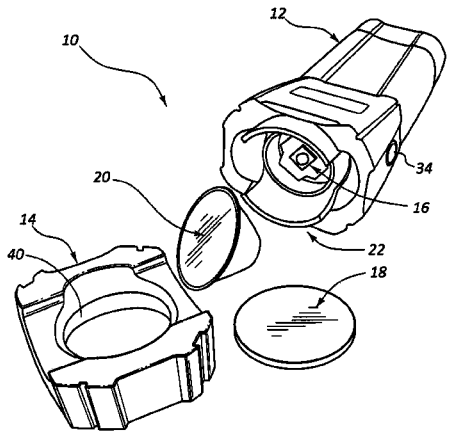
26 Claims, 10 Drawing Sheets